HIGH PERFORMANCE BALL VALVES

H6800 SERIES
H6800 CNG SERIES

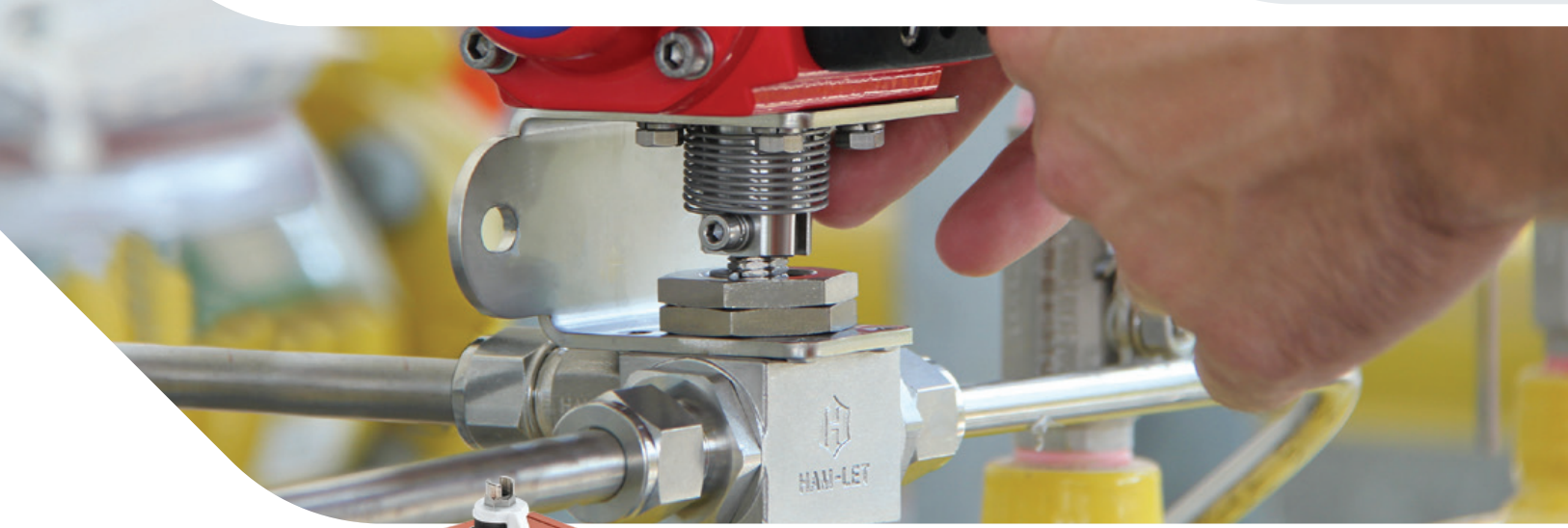

HAM-LET Group

H-6800 FEATURES

- Certified for ISO 15848-1:2006(E)
- On/off-service ball valve with 2-way pattern
- Diverter-service ball valve with 3-way pattern
- Stainless Steel and Brass construction
- MAWP* 6000 psi (413 bar)
- MAWT* 500°F (260°C)
- Variable end connection types and sizes from 1/16” to 3/4” (3mm to 18mm)
- Operation with colored Nylon handles, metal handle, color
- anodized aluminum ISLT** (locking device) handles and pneumatically actuated

* Maximum Allowed Working Pressure, Maximum Allowed Working Temperature.
** ISLT – Integral Safety Lock-out Tag-out Patent pending

GENERAL

The H-6800 Series is a high-performance instrumentation ball valve for general service and instrumentation panels. The valves offer a tight shut-off*, long-life service and a low operating torque. The H-6800 Series is rated to max. 6000psig and performs on/off or as a diverter service.

*3-Way H-6800 is designed for diverting only and not for shut-off service. Inlet is from the bottom only. 3-Way H-6800 is designed to be fully opened to any of the side ports.

⚠ **HAM-LET Ball Valves are designed for operation in the fully closed or fully open position.**

MATERIAL OF CONSTRUCTION

No.	Part	Qty	Maximum allowed working pressure	
			Up to 3000 psig	Up to 6000 psig
1	Handle	1	Nylon / Metal / ISLT	Nylon / Metal / ISLT
2	Handle Set Screw	1	St.St.304	St.St.304
3	Packing Bolt	1	St.St.316	St.St.316
4	Packing	3	Modified PTFE	PCTFE/ PEEK
5	*Gland	2	St.St.304	St.St.304
6	*Stem	1	St.St.316	St.St.316
7	*Ball	1	St.St.316	St.St.316
8	*Panel Nut	1	St.St.303 / Brass	St.St.303
9	*End Cap	2	St.St.316 / Brass	St.St.316
10	*Body Seal	2	Virgin PTFE	PTFE / PEEK
11	*Seat	2	Modified PTFE	PCTFE / PEEK
12	*Body	1	St.St. ASTM A351 Gr.CF8M Brass ASTM B-16	St.St. ASTM A-276
	Lubricants		Silicone based and PTFE based	

* Wetted parts

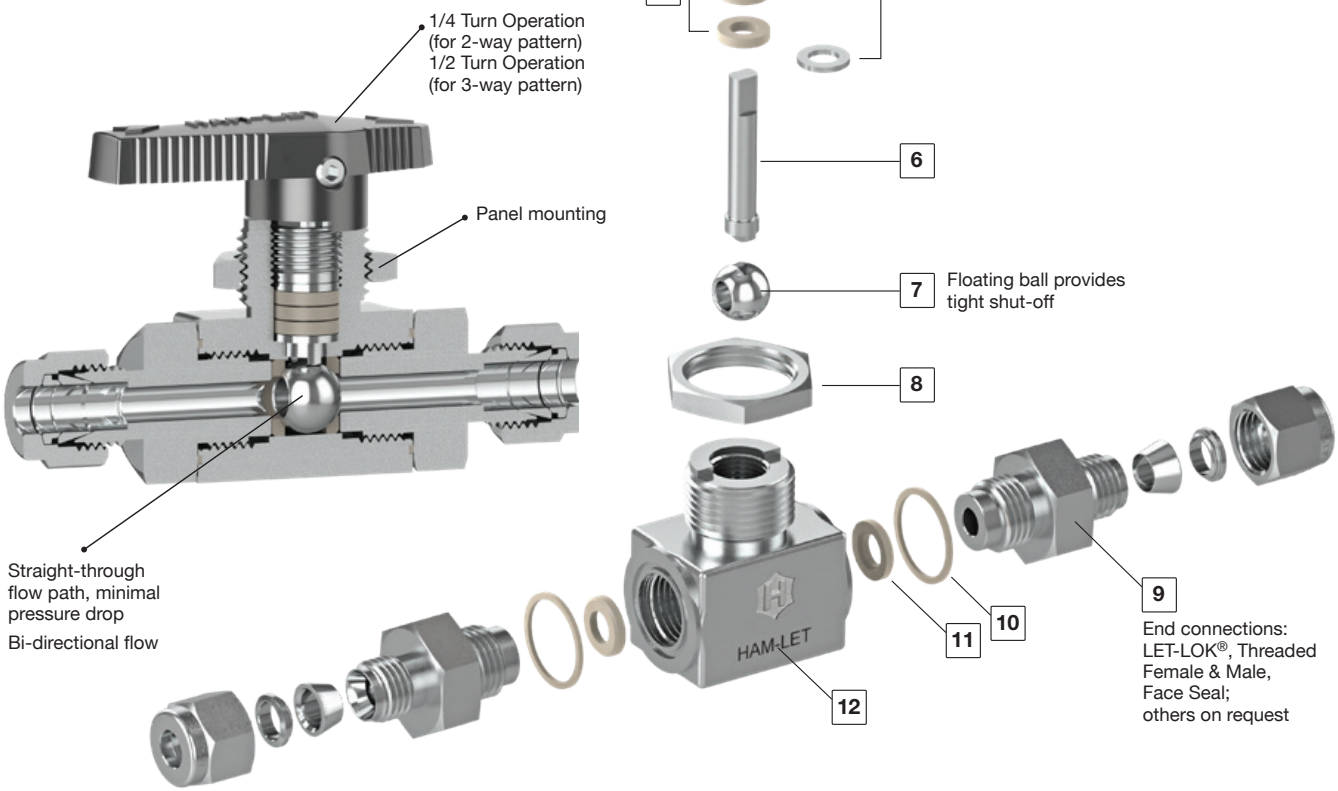

TESTING

The H-6800 design has been tested for burst and proof. Standard testing for each H-6800 valve includes testing with nitrogen at 80 &1000 psig. Each valve is tested for leakage through the shell, packing and ball seats. The maximum allowable leakage across the ball seats is 0.1 std cc/min.

CLEANING & PACKAGING

Every H-6800 series ball valve is cleaned in accordance with Standard Cleaning and Packaging (procedure 8184). Oxygen Clean & Lubricant-Free Cleaning and packaging, in accordance with Special Cleaning and Packaging (procedure 8185), is available as an option.

⚠ **Lubricant-Free cleaned valves have significantly higher actuation torque.**

PRESSURE TEMPERATURE RATINGS

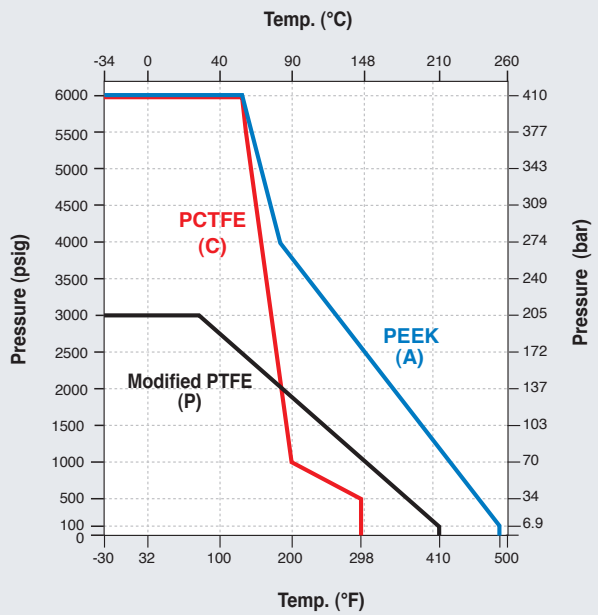

Note: The maximum allowed working pressure that is marked on the valve may be limited according to the pressure limitations that are recommended by the tubing /piping standards (Reference: Let-Lok tube fittings General Information).

SEAT MATERIAL CHARACTERISTICS

MODIFIED PTFE

Excellent seat material for purity applications. Very low residual material during operation. Lower deformation ratio than PTFE, but higher pressure and temperature ratings than PTFE. Rated up to 410°F (210°C).
Chemical resistance equal to PTFE material.

PCTFE

Excellent seat material for low temperature applications such as Oxygen and Nitrogen. Suitable for low temperature applications down to -40ºC (-40ºF).

PEEK (PolyEtherEtherKeton)

Excellent seat material for high-pressure and high-temperature applications. Excellent chemical resistance. Can be used continuosly up to 500ºF (260ºC) and in hot water or steam without permanent loss in physical properties. High strength for hostile enviroments and high pressure.

Warning: Combination of PEEK seats and hot water may be critical for valve operating torque.

PACKING ADJUSTMENT

Due to the varied service applications of the valve, packing adjustment may be occasionally necessary. Packing is factory adjusted to 1000 psig service. Please find more information in the installation instruction chapter.

⚠ **Initial packing adjustment is recommended after installation and prior to start-up**

⚠ **Valve that have not been operated for a period of time will introduce a higher actuation torque**

BODY & SEAT MATERIAL COMBINATIONS

Body Material	MAWP*	MAWT**	Seat Material
St.St. ASTM A351 Gr. CF8M	3000psi (206bar)	410°F (210°C)	Modified PTFE
St.St. ASTM A-479	6000psi (413 bar)	500°F (260°C)	PEEK***
St.St. ASTM A-479	6000psi (413 bar)	298°F (148°C)	PCTFE
Brass ASTM B-16	3000psi (206 bar)	410°F (210°C)	Modified PTFE
Super duplex	6000psi (413 bar)	410°F (210°C)	Modified PTFE
Super duplex	6000psi (413 bar)	500°F (260°C)	PEEK***
Super duplex	6000psi (413 bar)	298°F (148°C)	PCTFE
Alloy C-276	3000psi (206 bar)	410°F (210°C)	Modified PTFE
Alloy C-276	3000psi (206 bar)	500°F (260°C)	PEEK***
Alloy C-276	3000psi (206 bar)	298°F (148°C)	PCTFE
Alloy 400	3000psi (206 bar)	410°F (210°C)	Modified PTFE
Alloy 400	3000psi (206 bar)	500°F (260°C)	PEEK***
Alloy 400	3000psi (206 bar)	298°F (148°C)	PCTFE

For other body and seat combinations, please contact our cutomer service.
* Maximum Allowed Working Pressure.
** Maximum Allowed Working Temperature.
*** Lubricant-Free cleaned valves with PEEK seats, MAWP is 3000 (260 bar) psi.

ANGLE AND T-TYPE VALVE

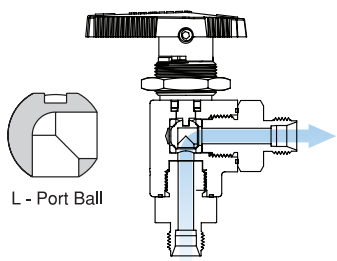

NOTE: Bottom entry only

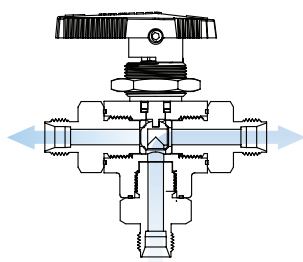

NOTE: - Bottom entry only
- Not suitable for shut-off application

MANUAL OPERATION

*Black nylon handle with brass insert is standard Add ISLT handle

STRAIGHT PORT VALVE

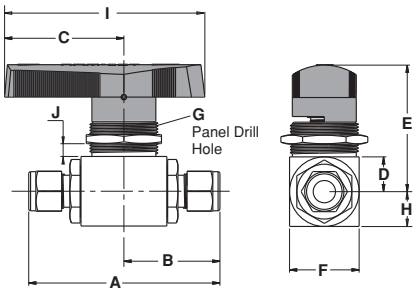

STRAIGHT PORT, STANDARD CONFIGURATION DIMENSIONS

Size	End Connection		Orifice		Cv	A		B		C		D		E		F		G		H		I*		J**	
	mm	inch	mm	inch		mm	in	mm	in	mm	in	mm	in	mm	in	mm	in	mm	in	mm	in	mm	in	mm	in
1/16''	Let-Lok® Inch		1.3	0.051	0.1	70.2	2.76	35.1	1.38	31.0	1.22	11.1	0.44	38.85	1.53	22.2	0.87	19.3	0.76	11.1	0.44	50.0	1.96	6.5	0.255
1/8''			2.4	0.094	0.2	78.6	3.09	39.3	1.55	31.0	1.22	11.1	0.44	38.85	1.53	22.2	0.87	19.3	0.76	11.1	0.44	50.0	1.96	6.5	0.255
1/4''			4.8	0.189	1.5	83.6	3.29	41.8	1.65	31.0	1.22	11.1	0.44	38.85	1.53	22.2	0.87	19.3	0.76	11.1	0.44	50.0	1.96	6.5	0.255
3/8''			4.8	0.189	1.5	86.3	3.40	43.15	1.70	31.0	1.22	11.1	0.44	38.85	1.53	22.2	0.87	19.3	0.76	11.1	0.44	50.0	1.96	6.5	0.255
1/2''			10.3	0.409	12	102.5	4.04	51.25	2.02	50.0	1.97	16.0	0.63	50.0	1.97	32.0	1.26	20.8	0.82	16.0	0.63	80.0	3.15	6.5	0.255
3/4''			10.3	0.409	6.5	102.5	4.04	51.25	2.02	50.0	1.97	16.0	0.63	50.0	1.97	32.0	1.26	20.8	0.82	16.0	0.63	80.0	3.15	6.5	0.255
3mm	Let-Lok® Metric		2.4	0.094	0.2	78.6	3.09	39.3	1.55	31.0	1.22	11.1	0.44	38.85	1.53	22.2	0.87	19.3	0.76	11.1	0.44	50.0	1.96	6.5	0.255
6mm			4.8	0.189	1.5	83.6	3.29	41.8	1.65	31.0	1.22	11.1	0.44	38.85	1.53	22.2	0.87	19.3	0.76	11.1	0.44	50.0	1.96	6.5	0.255
8mm			4.8	0.189	1.5	84.8	3.34	42.4	1.67	31.0	1.22	11.1	0.44	38.85	1.53	22.2	0.87	19.3	0.76	11.1	0.44	50.0	1.96	6.5	0.255
10mm			4.8	0.189	1.5	86.4	3.40	43.2	1.70	31.0	1.22	11.1	0.44	38.85	1.53	22.2	0.87	19.3	0.76	11.1	0.44	50.0	1.96	6.5	0.255
12mm			10.3	0.409	12	102.5	4.04	51.25	2.02	50.0	1.97	16.0	0.63	50.0	1.97	32.0	1.26	20.8	0.82	16.0	0.63	80.0	3.15	6.5	0.255
18mm			10.3	0.409	6.5	102.5	4.04	51.25	2.02	50.0	1.97	16.0	0.63	50.0	1.97	32.0	1.26	20.8	0.82	16.0	0.63	80.0	3.15	6.5	0.255
1/8''	Female NPT/ BSPT		4.8	0.189	1.2	63.6	2.50	31.8	1.25	31.0	1.22	11.1	0.44	38.85	1.53	22.2	0.87	19.3	0.76	11.1	0.44	50.0	1.96	6.5	0.255
1/4''			4.8	0.189	0.9	64.0	2.52	32.0	1.26	31.0	1.22	11.1	0.44	38.85	1.53	22.2	0.87	19.3	0.76	11.1	0.44	50.0	1.96	6.5	0.255
3/8''			4.8	0.189	0.6	69.6	2.74	34.8	1.37	31.0	1.22	11.1	0.44	38.85	1.53	22.2	0.87	19.3	0.76	11.1	0.44	50.0	1.96	6.5	0.255
1/2''			10.3	0.409	6.3	87.4	3.44	43.7	1.72	50.0	1.97	16.0	0.63	50.0	1.97	32.0	1.26	20.8	0.82	16.0	0.63	80.0	3.15	6.5	0.255
3/4''			10.3	0.409	6.1	91.0	3.58	45.5	1.79	50.0	1.97	16.0	0.63	50.0	1.97	32.0	1.26	20.8	0.82	16.0	0.63	80.0	3.15	6.5	0.255
1/8''	Female BSPP		4.8	0.189	1.2	63.6	2.50	31.8	1.25	31.0	1.22	11.1	0.44	38.85	1.53	22.2	0.87	19.3	0.76	11.1	0.44	50.0	1.96	6.5	0.255
1/4''			4.8	0.189	0.9	64.0	2.52	32.0	1.26	31.0	1.22	11.1	0.44	38.85	1.53	22.2	0.87	19.3	0.76	11.1	0.44	50.0	1.96	6.5	0.255
3/8''			4.8	0.189	0.6	69.6	2.74	34.8	1.37	31.0	1.22	11.1	0.44	38.85	1.53	22.2	0.87	19.3	0.76	11.1	0.44	50.0	1.96	6.5	0.255
1/2''			10.3	0.409	6.3	87.4	3.44	43.7	1.72	50.0	1.97	16.0	0.63	50.0	1.97	32.0	1.26	20.8	0.82	16.0	0.63	80.0	3.15	6.5	0.255
3/4''			10.3	0.409	6.1	91.0	3.58	45.5	1.79	50.0	1.97	16.0	0.63	50.0	1.97	32.0	1.26	20.8	0.82	16.0	0.63	80.0	3.15	6.5	0.255
1/8''	Male NPT/ BSPT		4.8	0.189	1.5	67.6	2.66	33.8	1.33	31.0	1.22	11.1	0.44	38.85	1.53	22.2	0.87	19.3	0.76	11.1	0.44	50.0	1.96	6.5	0.255
1/4''			4.8	0.189	1.2	76.6	3.02	38.3	1.51	31.0	1.22	11.1	0.44	38.85	1.53	22.2	0.87	19.3	0.76	11.1	0.44	50.0	1.96	6.5	0.255
3/8''			4.8	0.189	0.9	76.6	3.02	38.3	1.51	31.0	1.22	11.1	0.44	38.85	1.53	22.2	0.87	19.3	0.76	11.1	0.44	50.0	1.96	6.5	0.255
1/2''			10.3	0.409	8.2	92.4	3.64	46.2	1.82	50.0	1.97	16.0	0.63	50.0	1.97	32.0	1.26	20.8	0.82	16.0	0.63	80.0	3.15	6.5	0.255
3/4''			10.3	0.409	4.5	94.4	3.71	47.2	1.86	50.0	1.97	16.0	0.63	50.0	1.97	32.0	1.26	20.8	0.82	16.0	0.63	80.0	3.15	6.5	0.255
1/8''	Male BSPP		4.8	0.189	1.5	65.4	2.57	32.7	1.29	31.0	1.22	11.1	0.44	38.85	1.53	22.2	0.87	19.3	0.76	11.1	0.44	50.0	1.96	6.5	0.255
1/4''			4.8	0.189	1.2	76.6	3.02	38.3	1.51	31.0	1.22	11.1	0.44	38.85	1.53	22.2	0.87	19.3	0.76	11.1	0.44	50.0	1.96	6.5	0.255
3/8''			4.8	0.189	0.9	76.6	3.02	38.3	1.51	31.0	1.22	11.1	0.44	38.85	1.53	22.2	0.87	19.3	0.76	11.1	0.44	50.0	1.96	6.5	0.255
1/2''			10.3	0.409	8.2	92.4	3.64	46.2	1.82	50.0	1.97	16.0	0.63	50.0	1.97	32.0	1.26	20.8	0.82	16.0	0.63	80.0	3.15	6.5	0.255
3/4''			10.3	0.409	4.5	94.4	3.71	47.2	1.86	50.0	1.97	16.0	0.63	50.0	1.97	32.0	1.26	20.8	0.82	16.0	0.63	80.0	3.15	6.5	0.255
1/4''	Face Seal Male		4.5	0.18	2.4	75.0	2.95	37.5	1.47	31.0	1.22	11.1	0.44	38.85	1.53	22.2	0.87	19.3	0.76	11.1	0.44	50.0	1.96	6.5	0.255
1/2''			10.3	0.409	12	93.8	3.69	46.9	1.85	50.0	1.97	16.0	0.63	50.0	1.97	32.0	1.26	20.8	0.82	16.0	0.63	80.0	3.15	6.5	0.255

Face to face dimensions for LET-LOK® end connections (dimensions A and B) are finger tight.
* Refers to standard nylon handle.
** Maximum panel thickness.
Dimensions are for reference only and are subject to change.

VALVE END CONNECTIONS	Handle Designator	N	L
From 2/1 to 1”	LH	104.3 MM	39.5 MM

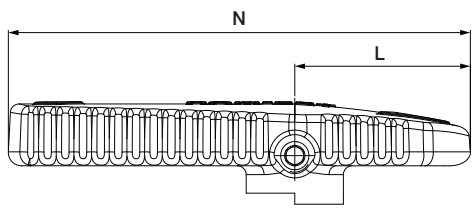

ANGLE & 3-PORT VALVE

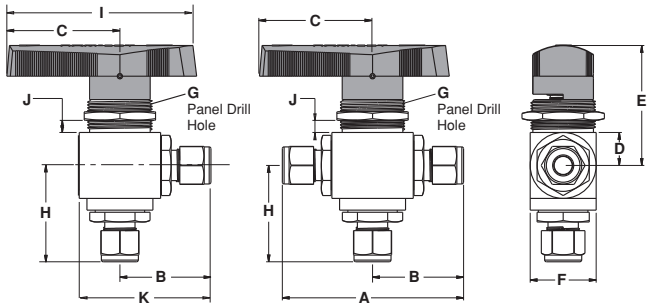

ANGLE & 3-PORT, STANDARD CONFIGURATION DIMENSIONS

Size	End Connection		Orifice		Cv	A		K		B		C		D		E		F		G		H		I*		J**	
	mm	inch	mm	inch		mm	in	mm	in	mm	in	mm	in	mm	in	mm	in	mm	in	mm	in	mm	in	mm	in	mm	in
1/16''	Let-Lok® Inch		1.3	0.051	0.08	70.2	2.76	46.2	1.82	35.1	1.38	31.0	1.22	11.1	0.44	38.85	1.53	22.2	0.87	19.3	0.76	37.9	1.49	50.0	1.96	6.5	0.255
1/8''			2.4	0.094	0.15	78.6	3.09	50.4	1.95	39.3	1.55	31.0	1.22	11.1	0.44	38.85	1.53	22.2	0.87	19.3	0.76	42.1	1.66	50.0	1.96	6.5	0.255
1/4''			4.8	0.189	0.90	83.6	3.29	52.9	2.08	41.8	1.65	31.0	1.22	11.1	0.44	38.85	1.53	22.2	0.87	19.3	0.76	44.6	1.76	50.0	1.96	6.5	0.255
3/8''			4.8	0.189	0.60	86.3	3.40	54.25	2.13	43.15	1.70	31.0	1.22	11.1	0.44	38.85	1.53	22.2	0.87	19.3	0.76	46.0	1.81	50.0	1.96	6.5	0.255
1/2''			10.3	0.40	4.6	102.5	4.04	67.3	2.65	51.25	2.02	50.0	1.97	16.0	0.63	50.0	1.97	32.0	1.26	20.8	0.82	57.5	2.26	80.0	3.15	6.5	0.255
3/4''			10.3	0.40	3.8	102.5	4.04	67.3	2.65	51.25	2.02	50.0	1.97	16.0	0.63	50.0	1.97	32.0	1.26	20.8	0.82	57.5	2.26	80.0	3.15	6.5	0.255
3mm	Let-Lok® Metric		2.4	0.094	0.15	78.6	3.09	52.0	2.05	39.3	1.55	31.0	1.22	11.1	0.44	38.85	1.53	22.2	0.87	19.3	0.76	42.1	1.66	50.0	1.96	6.5	0.255
6mm			4.8	0.189	0.90	83.6	3.29	52.8	2.08	41.8	1.65	31.0	1.22	11.1	0.44	38.85	1.53	22.2	0.87	19.3	0.76	44.6	1.76	50.0	1.96	6.5	0.255
8mm			4.8	0.189	0.80	84.8	3.34	53.5	2.1	42.4	1.67	31.0	1.22	11.1	0.44	38.85	1.53	22.2	0.87	19.3	0.76	45.2	1.78	50.0	1.96	6.5	0.255
10mm			4.8	0.189	0.60	86.4	3.40	54.3	2.14	43.2	1.70	31.0	1.22	11.1	0.44	38.85	1.53	22.2	0.87	19.3	0.76	46.0	1.81	50.0	1.96	6.5	0.255
12mm			10.3	0.40	4.6	102.5	4.04	67.3	2.65	51.25	2.02	50.0	1.97	16.0	0.63	50.0	1.97	32.0	1.26	20.8	0.82	57.5	2.11	80.0	3.15	6.5	0.255
18mm			10.3	0.40	2.5	102.5	4.04	67.3	2.65	51.25	2.02	50.0	1.97	16.0	0.63	50.0	1.97	32.0	1.26	20.8	0.82	57.5	1.19	80.0	3.15	6.5	0.255
1/8''	Female NPT/ BSPT		4.8	0.189	0.3	63.6	2.50	42.9	1.7	32.0	1.26	31.0	1.22	11.1	0.44	38.85	1.53	22.2	0.87	19.3	0.76	34.6	1.36	50.0	1.96	6.5	0.255
1/4''			4.8	0.189	0.75	64.0	2.52	43.1	1.69	31.8	1.25	31.0	1.22	11.1	0.44	38.85	1.53	22.2	0.87	19.3	0.76	34.8	1.37	50.0	1.96	6.5	0.255
3/8''			4.8	0.189	0.5	69.6	2.74	45.9	1.8	34.8	1.37	31.0	1.22	11.1	0.44	38.85	1.53	22.2	0.87	19.3	0.76	37.6	1.48	50.0	1.96	6.5	0.255
1/2''			10.3	0.40	3.5	87.4	3.44	59.7	2.35	43.7	1.72	50.0	1.97	16.0	0.63	50.0	1.97	32.0	1.26	20.8	0.82	50.0	1.97	80.0	3.15	6.5	0.255
3/4''			10.3	0.40	2.5	91.0	3.58	61.5	2.42	45.5	1.79	50.0	1.97	16.0	0.63	50.0	1.97	32.0	1.26	20.8	0.82	50.0	1.97	80.0	3.15	6.5	0.255
1/8''	Female BSPP		4.8	0.189	0.3	63.6	2.50	42.9	1.7	32.0	1.26	31.0	1.22	11.1	0.44	38.85	1.53	22.2	0.87	19.3	0.76	34.6	1.36	50.0	1.96	6.5	0.255
1/4''			4.8	0.189	0.75	64.0	2.52	43.1	1.69	31.8	1.25	31.0	1.22	11.1	0.44	38.85	1.53	22.2	0.87	19.3	0.76	34.8	1.37	50.0	1.96	6.5	0.255
3/8''			4.8	0.189	0.5	69.6	2.74	45.9	1.8	34.8	1.37	31.0	1.22	11.1	0.44	38.85	1.53	22.2	0.87	19.3	0.76	37.6	1.48	50.0	1.96	6.5	0.255
1/2''			10.3	0.40	3.5	87.4	3.44	59.7	2.35	43.7	1.72	50.0	1.97	16.0	0.63	50.0	1.97	32.0	1.26	20.8	0.82	50.0	1.97	80.0	3.15	6.5	0.255
3/4''			10.3	0.40	2.5	91.0	3.58	61.5	2.42	45.5	1.79	50.0	1.97	16.0	0.63	50.0	1.97	32.0	1.26	20.8	0.82	50.0	1.97	80.0	3.15	6.5	0.255
1/8''	Male NPT/ BSPT		4.8	0.189	0.9	67.6	2.66	44.9	1.76	33.8	1.33	31.0	1.22	11.1	0.44	38.85	1.53	22.2	0.87	19.3	0.76	36.6	1.44	50.0	1.96	6.5	0.255
1/4''			4.8	0.189	0.6	76.6	3.02	49.4	1.94	38.3	1.51	31.0	1.22	11.1	0.44	38.85	1.53	22.2	0.87	19.3	0.76	41.1	1.62	50.0	1.96	6.5	0.255
3/8''			4.8	0.189	0.35	76.6	3.02	49.4	1.94	38.3	1.51	31.0	1.22	11.1	0.44	38.85	1.53	22.2	0.87	19.3	0.76	41.1	1.62	50.0	1.96	6.5	0.255
1/2''			10.3	0.40	3.0	92.4	3.64	62.2	2.45	46.2	1.82	50.0	1.97	16.0	0.63	50.0	1.97	32.0	1.26	20.8	0.82	52.5	2.07	80.0	3.15	6.5	0.255
3/4''			10.3	0.40	2.0	94.4	3.71	63.2	2.49	47.2	1.86	50.0	1.97	16.0	0.63	50.0	1.97	32.0	1.26	20.8	0.82	53.5	2.1	80.0	3.15	6.5	0.255
1/8''	Male BSPP		4.8	0.189	0.9	65.4	2.57	43.8	1.72	32.7	1.29	31.0	1.22	11.1	0.44	38.85	1.53	22.2	0.87	19.3	0.76	36.6	1.44	50.0	1.96	6.5	0.255
1/4''			4.8	0.189	0.6	76.6	3.02	49.4	1.94	38.3	1.51	31.0	1.22	11.1	0.44	38.85	1.53	22.2	0.87	19.3	0.76	41.1	1.62	50.0	1.96	6.5	0.255
3/8''			4.8	0.189	0.35	76.6	3.02	49.4	1.94	38.3	1.51	31.0	1.22	11.1	0.44	38.85	1.53	22.2	0.87	19.3	0.76	41.1	1.62	50.0	1.96	6.5	0.255
1/2''			10.3	0.40	3.0	92.4	3.64	62.2	2.45	46.2	1.82	50.0	1.97	16.0	0.63	50.0	1.97	32.0	1.26	20.8	0.82	52.5	2.07	80.0	3.15	6.5	0.255
3/4''			10.3	0.40	2.0	94.4	3.71	63.2	2.49	47.2	1.86	50.0	1.97	16.0	0.63	50.0	1.97	32.0	1.26	20.8	0.82	53.5	2.1	80.0	3.15	6.5	0.255
1/4''	Face Seal Male		4.5	0.18	0.9	75.0	2.95	48.6	1.91	37.5	1.47	31.0	1.22	11.1	0.44	38.85	1.53	22.2	0.87	19.3	0.76	40.3	1.58	50.0	1.96	6.5	0.255
1/2''			10.3	0.40	4.6	93.8	3.69	62.9	2.47	46.9	1.85	50.0	1.97	16.0	0.63	50.0	1.97	32.0	1.26	20.8	0.82	53.2	2.09	80.0	3.15	6.5	0.255

Dimensions are for reference only and are subject to change without notice.

DIMENSIONS FOR METAL HANDLE

VALVE END CONNECTIONS	Handle Designator	N	L
Up to 3/8 ends	M	50 MM	31 MM
Up to 3/8 ends	M7	70 MM	45 MM
From 1/2 to 3/4 ends	M	110 MM	80 MM

See Ordering Information

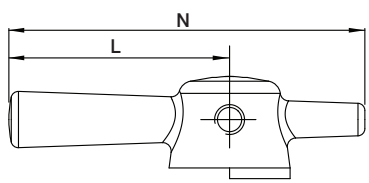

FEATURES

- ECE R110, Class 0 approved for the CNG / NGV
- MAWP* 3770 psig (260 barg)
- Temperature range: -40°C (-40°F) to 120°C (248°F)
- Variable LET-LOK® end connection sizes: 1/4”, 3/8”, 6mm, 8mm,10mm
- Stainless Steel construction with spring loaded seats
- ECE Approved for 20,000 cycles

* Maximum Allowed Working Pressure.

GENERAL

The H-6800 CNG Series is a high-performance instrumentation manual ball valve for the CNG / NGV with ECE R110-type approval. The valves offer a tight shut-off, long-life service and low operating torque.
The H-6800 CNG Series ball valve is rated to max. 3770 psig and performs as a manual on/off service.

MATERIAL OF CONSTRUCTION

No.	Part	Qty	Material
1	Handle	1	Nylon
2	Panel Nut	1	St.St.316 ASTM A-276 / A-479
3	Packing Bolt	1	St.St.316 ASTM A-276 / A-479
4	Stem washer	1	PEEK
5	*Stem	1	St.St.316 ASTM A-276 / A-479
6	Stem Upper packing	1	PEEK
7	Stem Lower packing	1	PTFE
8	*Stem O-Ring	1	Low temperature Fluorocarbon FKM
9	*Packing bolt Gasket	1	Silver plated St.St.316
10	*Body	1	St.St. ASTM A-479
11	*Ball	1	St.St.316 ASTM A-276 / A-479
12	*Seats	2	PEEK
13	*Seat back up Sealing	4	PTFE
14	*Seat O-Rings	2	Low temperature Fluorocarbon FKM
15	*Seat Gasket	2	St.St.316 ASTM A-276 / A-479
16	*Seat Spring	2	St.St.316 ASTM A-276 / A-479
17	*Body Seal gasket	2	Silver plated St.St.316
18	*End Cap	2	St.St.316 ASTM A-276 / A-479
	Lubricants		Silicone based

* Wetted parts

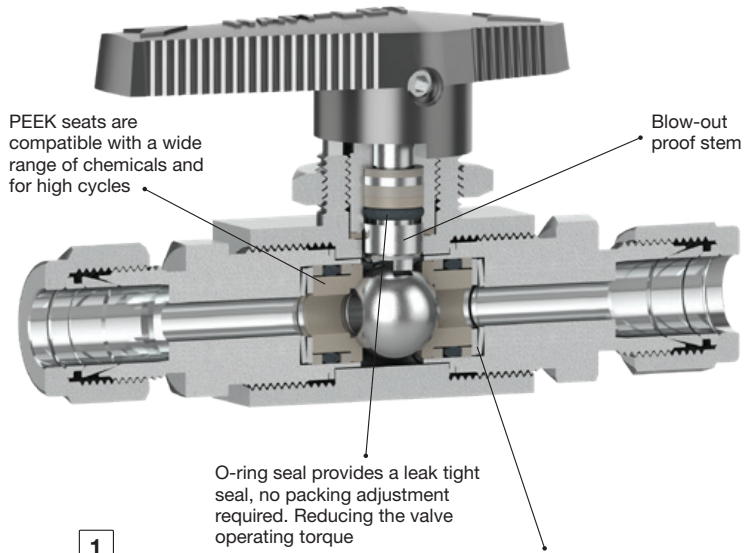

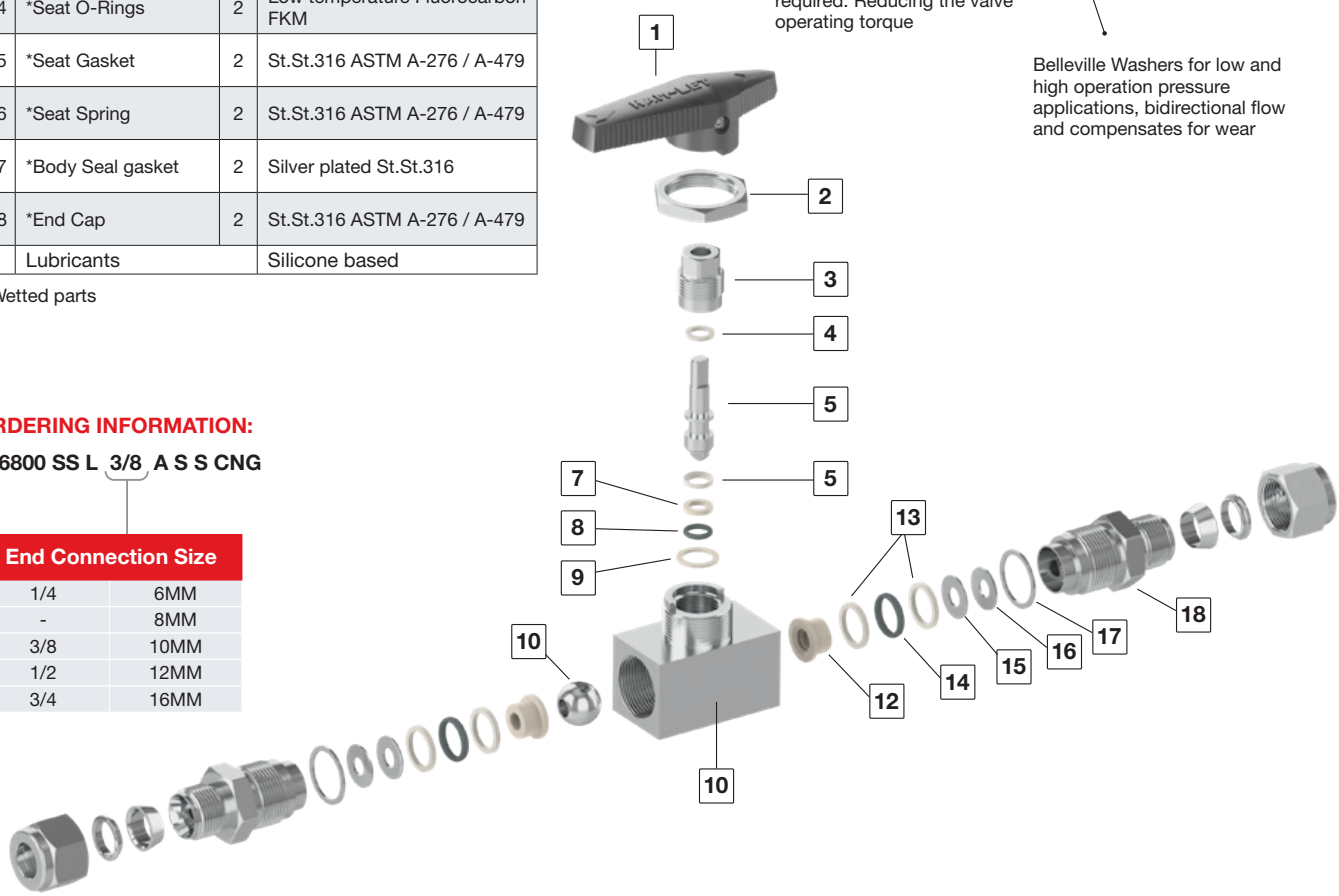

ORDERING INFORMATION:

H 6800 SS L 3/8 A S S CNG

End Connection Size	
1/4	6MM
-	8MM
3/8	10MM
1/2	12MM
3/4	16MM

H-6800 - PNEUMATIC ACTUATED VALVES

FEATURES

- 90° Actuation for 2-way valves (Straight & Angle)
- 180° Actuation for T-type valves
- Actuators comply with industry standards for interface with ISO 5211, NAMUR and VDI/VDE 3845
- Actuated valves are available factory assembled or seperately, actuator and mounting kits
- Limit switches, proximity sensors, position indicators, Solenoid valves, and other accessories are available upon request
- Standard temperature range: -32°C to 90°C (-25.6°F to 194°F)
- Optional: High Temperature, Low Temperature

GENERAL

Four standard actuator sizes are available upon request: Mini (designator “A1”), Small (designator “A2”), Medium (designator “A3”), Large (designator “A4”) and 180° Actuator (designator “A2T”). Improved operational speed enables better valve opening and closing control.
ATEX certification of Valves-Actuators assemblies are available on request at the time of order quotation.

MATERIAL OF CONSTRUCTION

No.	Part	Qty	Material
1	Actuator	1	AL 356-T5
2	Coupling	1	St.St.316
3	Bracket	1	St.St.304
4	Washer Flat	4	St.St.304
5	Washer Spring	4	St.St.304
6	Screw	4	St.St.304
7	Panel Nut	2	St.St.316
8	H6800	1	St.St.316 / Brass *

* Body material: St.St. ASTM A-276;
St.St. ASTM A351 Gr. CF8M; Brass ASTM B-16

90° Actuator on 2-way valve

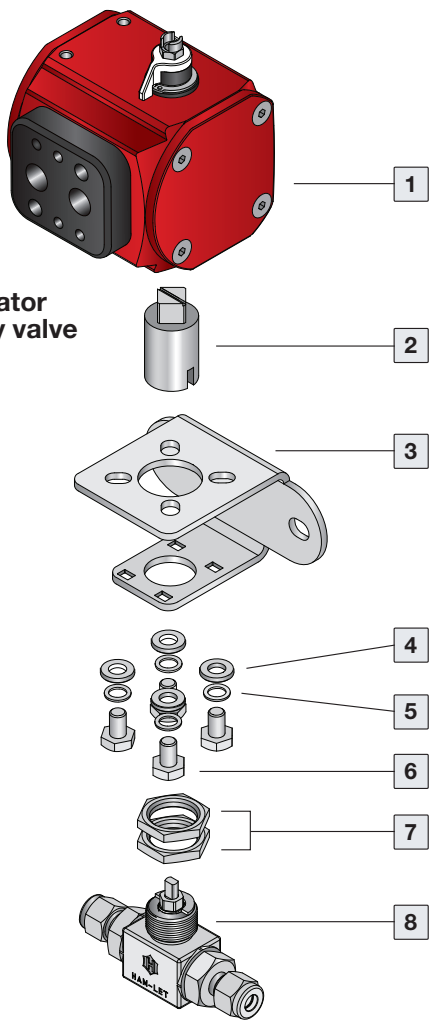

180° Actuator on T-type valve

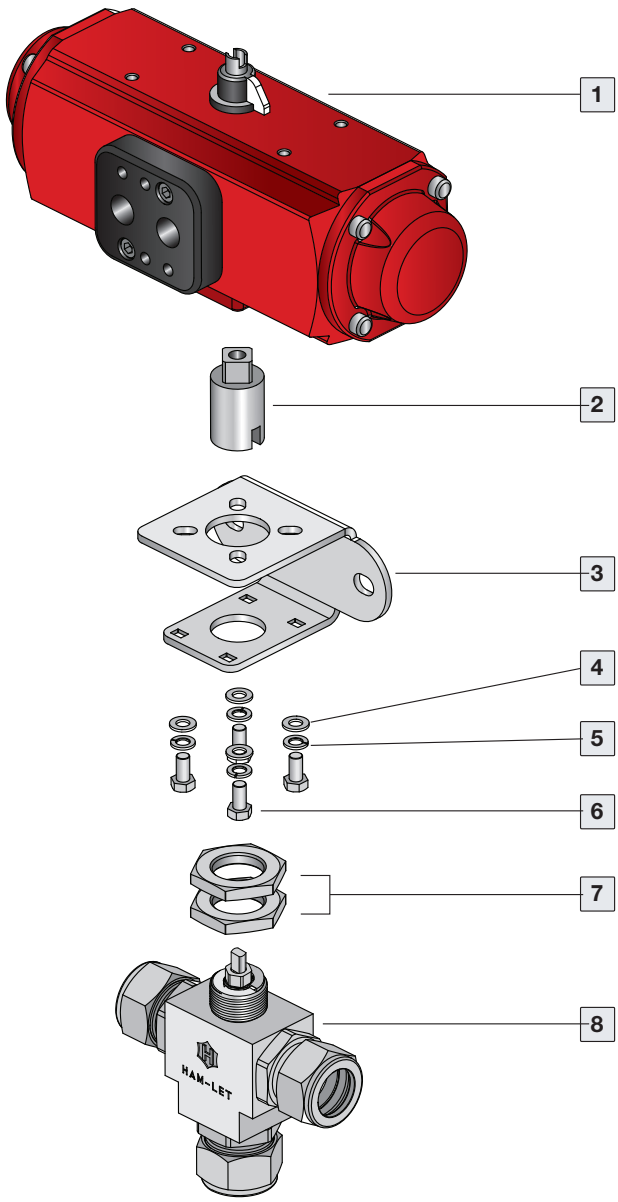

ACTUATED H-6800 SERIES

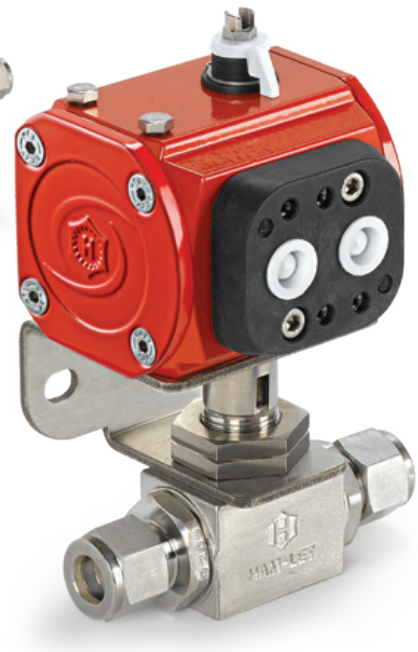

The selection of Valve-Actuator assemblies provided herein is based on:

- Valve maximum allowable working pressure
- Ambient temperature (50 to 100°F /10 to 37°C)
- Actuator fits to valve based on operating pressure of 6 bar, as per table A.

To order H-6800 ball valve factory assembled with an actuator, add the actuator designator to the valve part number / description per the below table.

Example:

H6800SSL1/4PSS with standard Double Acting Aluminum Actuator

H6800SSL1/4PS-A1

To order an actuator and mounting kit for field assembly:

Double acting Actuator ordering number: Z-A1

Corresponding mounting kit: Z-6800-MK-1/4-F03-F04-A1

Lubricant free Valves:

For Spring Return Actuator - select one size bigger then offered in the table below. Example:

If the offered actuator in the table is A2C, select A3C

For Double Acting Actuator - please contact your local representative

Table A: Ordering information for Actuated Valves

Series	Ends Size	Seats	Minimum Actuator Operating Pressure Bar (Psi)	Actuator Designators (Factory assembled)			Actuator Ordering Code		Mounting Kit Ordering Info
				Spring Return		Double Acting	Spring Return	Double Acting	
				NO	NC				
H-6800	1/16”-3/8” (3mm-10mm)	Modified PTFE PCTFE	5 (72.5)	A1O	A1C	A1	Z-A1S	Z-A1	Z-6800-MK-1/4”-F03-F04-A1
		PEEK	5 (72.5)	A2O	A2C		Z-A2S		Z-6800-MK-1/4”-F03-F04-A2
	1/2”-3/4” (12mm18mm)	Modified PTFE	5 (72.5)	A1O	A1C	A1	Z-A1S	Z-A1	Z-6800-MK-1/2”-F03-F04-A1
		PCTFE	5 (72.5)	A2O	A2C	A2	Z-A2S	Z-A2	Z-6800-MK-1/2”-F03-F04-A2
		PEEK	5 (72.5)	A3O	A3C		NC: Z-A3S NO: Z-A3O		Z-6800-MK-1/2”-F03-F04-A3
H-6800 T-type	1/16”-3/8” (3mm-10mm)	Modified PTFE PCTFE PEEK	5 (72.5)	A2TS	A2TS	A2T	Z-A2TS	Z-A2T	Z-6800-MK- 1/4”-F03-F04-A2
	1/2”-3/4” (12mm-18mm)								Z-6800-MK-1/2”-F03-F04-A2

Note: For dimensions of Actuators assembled on the H-6800 series, please refer to the HPA section.

Actuated valves- in cases the valve will be cycled less frequently than once per day or more frequently than once per hour, please contact your Ham-Let representative.

H-6800 SERIES ORDERING INFORMATION

OPTIONAL

H68 00 SS L 1/4 I C S S -

Valves Series

Valve Type

00 -	LET-LOK® End Connection
10 -	Female End Connection
80	Male End Connection
85 -	Male to Female End Connection
90	Female to LET-LOK® End Connection
95 -	Male to LET-LOK® End Connection

Body and Ends Material*

SS	- St.St. 316
B	- Brass
HC	- Alloy C-276
M	- Alloy 400
SD	- Super duplex

*For other materials, please consult HAM-LET

End Connection Size

1/16	3 MM
1/8	6 MM
1/4	8 MM
3/8	10 MM
1/2	12 MM
3/4	18 MM

End Connection

L	- LET-LOK® End
N	- Threaded NPT
G	- ISO parallel
R	- ISO Tapered
GL	- Metal Gasket Face seal
HL	- One-Lok Tube Fittings
NL	- NPT to LET-LOK®
LN	- LET-LOK® to NPT

Other end connections are available upon request.

Body Size

I	increased body
R	Reduced body

Seat Material

P	Modified PTFE
C	PCTFE
A	PEEK

Handle

BLANK	For Actuated valves
S	Black Nylon Handle
R	Red Nylon Handle
B	Blue Nylon Handle
Y	Yellow Nylon Handle
G	Green Nylon Handle
M	Metal (St.St.) Handle
M7	Metal (St.St.) Handle 70mm length*
ISLTS	ISLT Black
ISLTB	ISLT Blue
ISLTR	ISLT Red
ISLTY	ISLT Yellow
ISLTG	ISLT Green
LH	Long Handle

*Extended Metal Handle for valves up to 3/8". Recommended for PCTFE and PEEK valves.

Valve Pattern Type

S	Straight Port Valve
A	Angle Port Valve
T	3-Port Valve

Actuator Type

Select Per Table A	Aluminum Actuator*

*See Notes below

Approval

BLANK	- Standard
CNG	- ECE R110

Treatment

BLANK	- Standard Cleaning & Passivation
OC	- Oxygen Clean
LF	- Lubricant Free
SI	- Silicon Coating
SF	- Silicone free

For Actuated Valves

- If special cleaning is required, LF / OC will be added in the end and be applicable for the Valve only.
  Example: H6800SSL1/4PS - A1 - OC
- For ordering information of actuators for high temperature please refer to HAM-LET Pneumatic Actuator Catalog
- For double mounting actuators, please contact your local representative
- For actuators accessories (Limit Switch, Solenoid Valve) please refer to HAM-LET Pneumatic Actuator Catalog.
- For Stainless Steel Actuator or Electric Actuator please contact your local representative

ORDERING INFORMATION FOR SPARE KITS

SEAL KIT

Seal Kit includes seats, stem packings, body seals and label.

Z - 6800 - SK - 1/4 - A - 2 WAY

Kit Type	
SK	- Seal Kit

Body Designator per End Connection	
1/4	1/16 to 3/8 3MM to 10MM
1/2	1/2 to 3/4 12MM to18MM

Seat Material	
P	Modified PTFE
C	PCTFE
A	PEEK

Valve Pattern	
2 Way	For straight and angle Valves
3 Way	For T Port Valves

NOTE:
For Seal kits for “Old Design” valves, please contact a HAM-LET representative.

HANDLE KIT

Handle kit includes handle and set screw. To order a spare-parts kit, use the following format:

Z - 6800 - HK - 1/4 - S

Kit Type	
HK	-Handle Kit

Body Designator per End Connection	
1/4	1/16 to 3/8 3MM to 10MM
1/2	1/2 to 3/4 12MM to18MM

Handle Type	
S	Black Nylon Handle
R	Red Nylon Handle
B	Blue Nylon Handle
Y	Yellow Nylon Handle
G	Green Nylon Handle
M	Metal (St.St.) Handle
M7	Metal St.St Handle 70 mm*
ISLTS	ISLT Black**
ISLTB	ISLT Blue**
ISLTR	ISLT Red**
ISLTY	ISLT Yellow**
ISLTG	ISLT Green**
LH	Long Handle

*Extended Metal Handle for valves up to 3/8”.
Recommended for PCTFE and PEEK valves.
** Does not fit the standard valve.

Integral Safety Lock-Out Tag-Out Device

The integral locking mechanism enables safe and easy use for valve position locking and tagging. The design prevents undesirable valve position changes, without the requirement for additional locking equipment.
Available for 2-way straight pattern; locked-open and locked-close positions.
For 3-way pattern valves, the ISLT handle can lock in the left, center and right position.

Warning!
The system designer and user have the sole responsibility for selecting products suitable for their special application requirements, ensuring their safe and trouble-free installation, operation, and maintenance. Application details, material compatibility and product ratings should all be considered for each selected product. Improper selection, installation or use of products can cause property damage or personal injury.

H-6800 | 2019_Rev00