TBI MOTION 滾珠螺桿規格表 Dimension Table of TBI MOTION Ball Screws

型式 (TYPE) : SFV 高速重負載型 High-Speed & Heavy Load Ball Screw

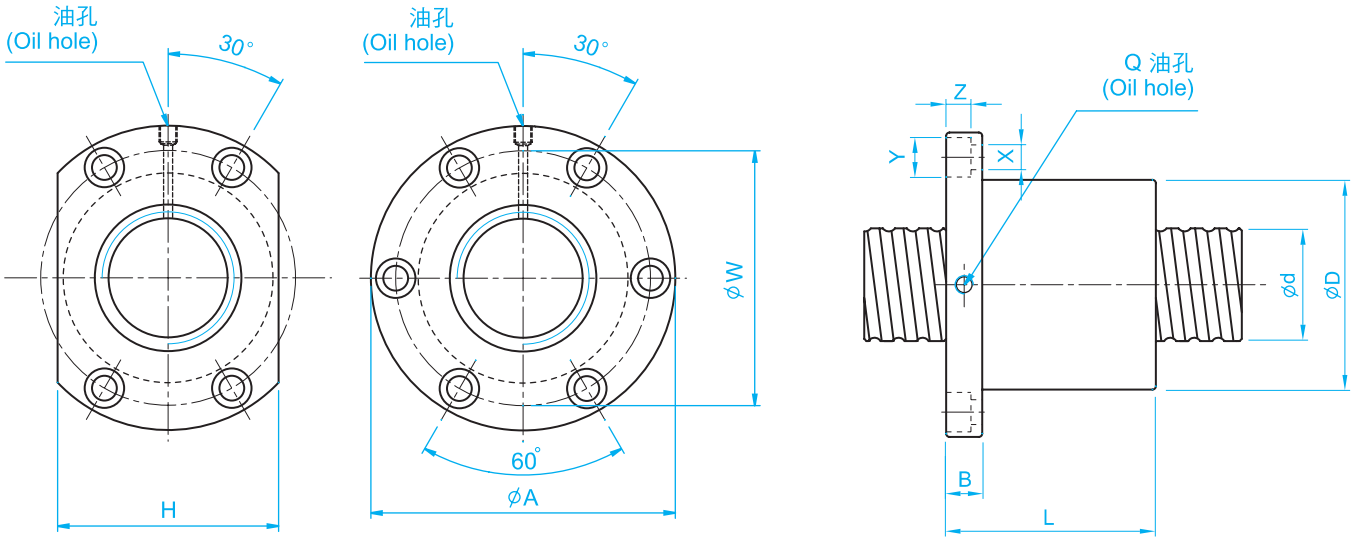

單位(Unit) : mm

l: 導程 Lead Da: 珠徑 Ball Dia. n: 珠圈數 Number of Circuits K: 剛性 Stiffness (Kgf/μm)
Ca: 動額定負荷 Basic Dynamic Rating Load (Kgf) Coa: 靜額定負荷 Basic Static Rating Load(Kgf)

型號 Model No.	滾珠螺桿、螺帽之基準數據 Dimensions																
	d	l	Da	D	A	B	L	W	H	X	Y	Z	Q	n	Ca	Coa	K
SFV01205-2.8	12	5	2.5	30	50	10	42	40	32	4.5	8	4.5	M6	2.8x1	661	1316	19
SFV01210-2.7		10	2.5	30	50	10	53	40	32	4.5	8	4.5	M6	2.7x1	623	1241	18
SFV01510-2.7	15	10	3.175	34	58	10	57	45	34	5.5	9.5	5.5	M6	2.7x1	972	2020	23
SFV01604-3.8	16	4	2.381	34	57	11	45	45	34	5.5	9.5	5.5	M6	3.8x1	931	2285	31
SFV01605-4.8		5	3.175	40	63	11	58	51	42	5.5	9.5	5.5	M6	4.8x1	1614	3662	40
SFV01610-2.7		10	3.175	40	63	11	56	51	42	5.5	9.5	5.5	M6	2.7x1	1008	2161	24
SFV02004-4.8	20	4	2.381	40	60	10	50	50	40	4.5	8	4	M6	4.8x1	1247	3584	45
SFV02005-4.8		5	3.175	44	67	11	57	55	52	5.5	9.5	5.5	M6	4.8x1	1814	4650	47
SFV02010-2.7		10	3.969	46	74	13	57	59	46	6.6	11	6.5	M6	2.7x1	1518	3398	30
SFV02020-1.8		20	3.175	46	74	13	70	59	46	6.6	11	6.5	M6	1.8x1	764	1758	19
SFV02505-4.8	25	5	3.175	50	73	11	55	61	52	5.5	9.5	5.5	M8	4.8x1	2017	5884	56
SFV02506-4.8		6	3.969	53	76	11	62	64	58	5.5	9.5	5.5	M6	4.8x1	2711	7268	58
SFV02508-4.8		8	4.762	56	85	13	70	71	64	6.5	11	6.5	M6	4.8x1	3466	8776	61
SFV02510-2.7		10	6.35	68	102	15	70	84	82	9	14	8.5	M8	2.7x1	3040	6547	37
SFV02525-1.8		25	3.175	50	73	13	83	61	52	5.5	9.5	5.5	M8	1.8x1	843	2199	22
SFV03204-4.8	32	4	2.381	54	81	12	50	67	64	6.6	11	6.5	M6	4.8x1	1517	5806	62
SFV03205-4.8		5	3.175	58	85	12	56	71	64	6.6	11	6.5	M8	4.8x1	2249	7612	66
SFV03206-4.8		6	3.969	62	89	12	60	75	68	6.6	11	6.5	M8	4.8x1	3079	9575	70
SFV03208-4.8		8	4.762	66	100	15	75	82	76	9	14	8.5	M8	4.8x1	3962	11547	74
SFV03210-4.8		10	6.35	74	108	15	96	90	82	9	14	9	M8	4.8x1	5620	14649	76
SFV03220-2.7		20	6.35	74	108	16	100	90	82	9	14	8.5	M8	2.7x1	3509	8644	46
SFV04005-4.8	40	5	3.175	67	101	15	59	83	72	9	14	8.5	M8	4.8x1	2468	9586	76
SFV04010-4.8		10	6.35	82	124	18	100	102	94	11	17.5	11	M8	4.8x1	6316	18600	90
SFV04020-2.7		20	6.35	82	124	18	100	102	90	11	17.5	11	M8	2.7x1	3935	10893	56
SFV05005-4.8	50	5	3.175	80	114	15	60	96	82	9	14	8.5	M8	4.8x1	2698	12053	87
SFV05010-4.8		10	6.35	93	135	16	93	113	98	11	17.5	11	M8	4.8x1	7023	23537	106
SFV05020-2.7		20	9.525	105	152	28	121	128	110	14	20	13	M8	2.7x1	7336	19700	68
SFV06310-4.8	63	10	6.35	108	154	22	105	130	110	14	20	13	M8	4.8x1	7860	30430	126
SFV06320-2.7		20	9.525	122	180	28	120	150	130	18	26	17.5	M8	2.7x1	8162	24741	80
SFV08010-4.8	80	10	6.35	130	176	22	105	152	132	14	20	13	M8	4.8x1	8593	38344	145
SFV08020-4.8		20	9.525	143	204	28	180	172	148	18	26	18	M8	4.8x1	15103	57296	168
SFV08020-7.6		20	9.525	143	204	28	240	172	148	18	26	18	M8	3.8x2	22423	90719	260

備註:有標註★記號者可製作左螺紋 Note: with sign ★ can be produced in left helix