SealS
www.summf.com
ISO9001&ISO14001

可替代 Burgmann M481型号
Replace Burgmann Seal M481

技术参数：

压力: ≤0.6MPa/≤1.6MPa
速率: ≤2m/s/≤5m/s
温度: -30˚C ~+200˚C /-80˚C ~+250˚C

Operating Limits

Pressure: ≤0.6MPa/≤1.6MPa
Speed: ≤2m/s/≤5m/s
Temperature: -30˚C ~+200˚C /-80˚C ~+250˚C

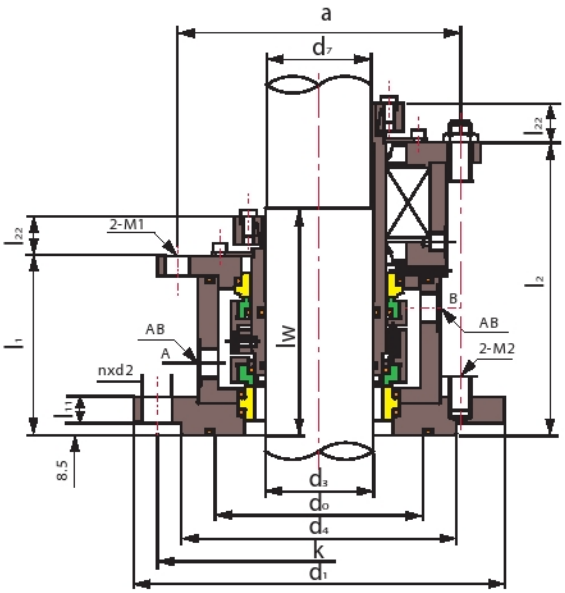

SM-MHS

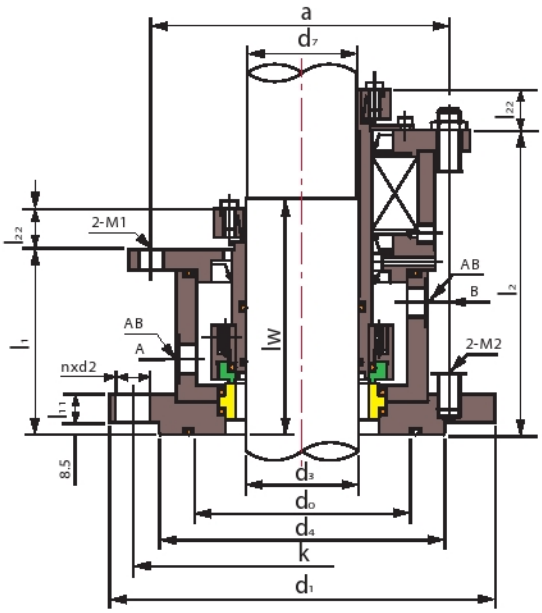

SM-M481

- 动环(碳化硅/石墨/碳化钨)
- 静环(碳化硅/碳化钨/陶瓷)
- 辅助密封(氟胶/包覆圈/聚四氟乙烯)
- 其它部件(SUS304/SUS316/钛材/哈氏-C)

- Rotary Ring(SiC/Carbon/TC)
- Stationary Ring(SiC/TC/Ceramic)
- Secondary Seal(VITON/Encapsulated Ring/PTFE)
- Other Parts(SUS304/SUS316/Titanium/Hastelloy-C)

d_3[1] (mm)	d_7[1]	d_1	n x d_2	d_4	d_o	k	l_1	l_2	l_W[2]	l_{11}	l_{12}	a	M_1	M_2	A,B
40	38	175	4x18	110	90	145	110.5	159.5	143	15	28	122	M12	M16	G3/8
50	48	240	8x18	176	135	210	114.5	174.5	148	17	28	157	M12	M16	G3/8
60	58	240	8x18	176	135	210	119.0	181.5	158	17	28	168	M12	M16	G3/8
80	78	275	8x22	204	155	240	133.0	217.5	168	20	34	203	M16	M20	G1/2
100	98	305	8x22	234	190	270	137.5	218.5	178	20	34	228	M16	M20	G1/2
125	120	330	8x22	260	215	295	138.5	233.5	203	20	40	268	M20	M20	G1/2
140	135	395	12x22	313	250	350	152.5	250.5	208	20	40	285	M20	M20	G1/2
160	150	395	12x22	313	265	350	161.0	253.0	213	25	40	297	M20	M20	G1/2
180	170	445	12x22	364	310	400	166.0	263.5	233	25	45	332	M24	M20	G1/2
200	190	445	12x22	364	310	400	171.0	271.0	243	25	45	352	M24	M20	G1/2
220	210	505	16x22	422	340	460	\	\	263	25	\	\	M24	M20	G1/2

1)shaft diameters D3 and D7 to DIN 28154
2)shaft step to DIN 28154