COATING	Wavelength Range (nm)	f (mm)	NA	Input MFD (um)	Divergence	Fiber-to-Lens Distance (mm)	Collimating Working Distance (mm)	AR Coating
A	370~700	6.96~7.67	0.32~0.29	3.5[a]	0.0297°[a]	5.00~6.60	5.22~5.68	Ravg<0.50%
B	650~1050			5.0[b]	0.0385°[b]	5.00~6.60	5.66~5.79	Ravg<1.00%
C	1050~1700			10.4[c]	0.0776°[c]	5.00~6.60	5.79~5.88	Ravg<1.00%

a.Calculated at 543nm wavelength with 460HP
b.Calculated at 780nm wavelength with 780HP
c.Calculated at 1550nm wavelength with SMF-28-J9

REVISION HISTORY				
REV	DCO	DESCRIPTION	DATE	INITIALS
A	S-0403	INITIAL RELEASE	06/20/25	YCW

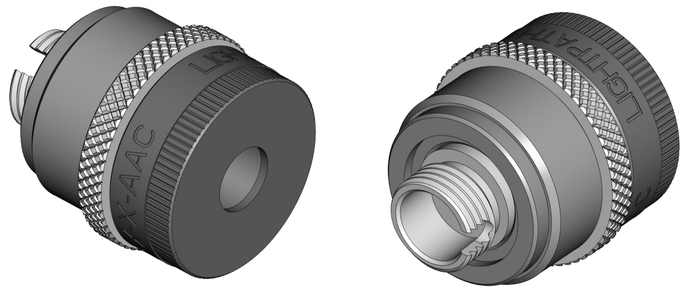

ISOMETRIC VIEW
SCALE 3.000

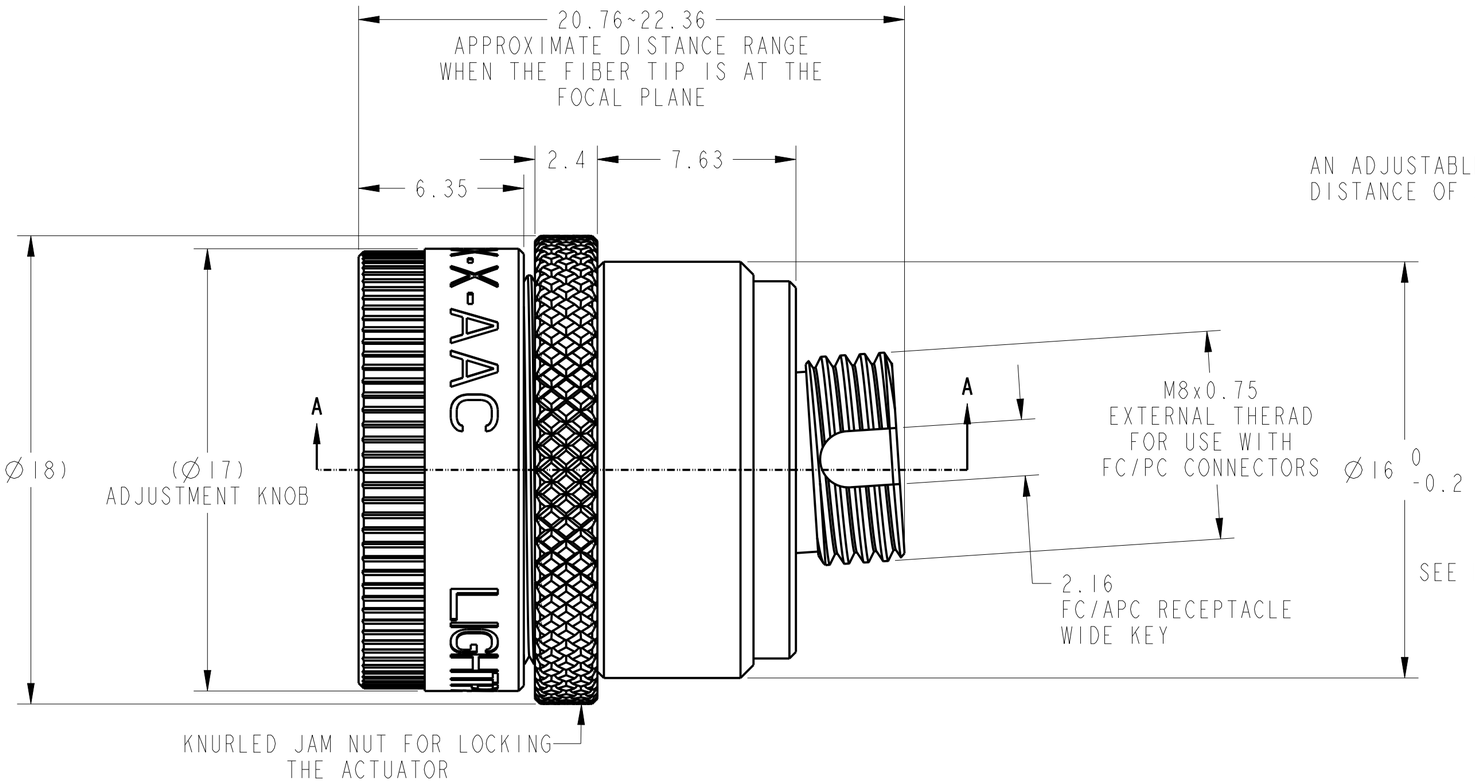

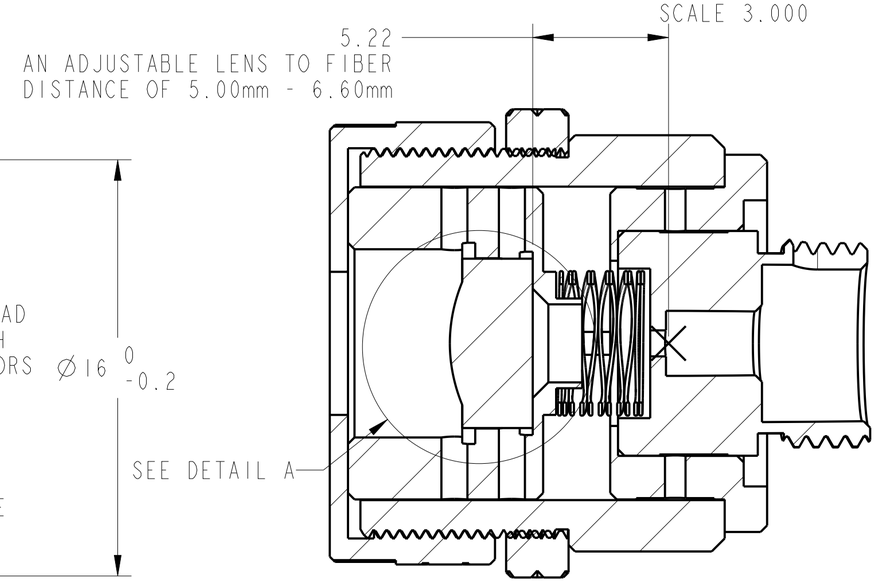

SECTION A-A

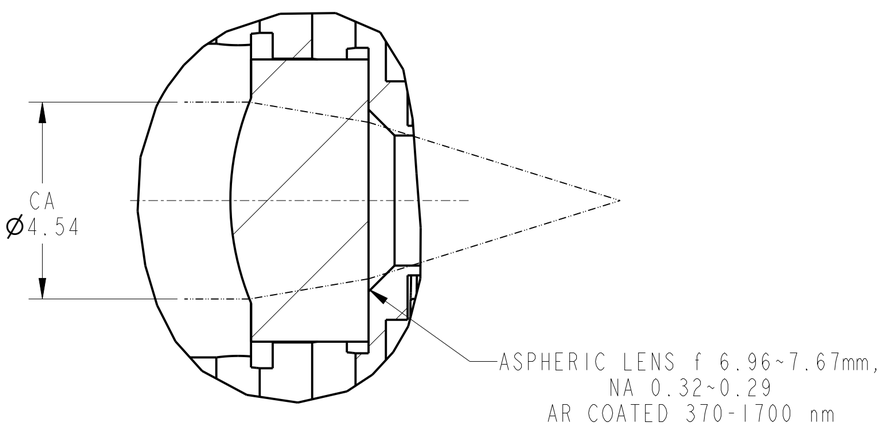

DETAIL A
SCALE 10.000

UNLESS OTHERWISE SPECIFIED
DIMENSIONS ARE IN MM.
DECIMAL TOLERANCES ARE:
.X ± 0.25
.XX ± 0.10
.XXX ± 0.025
.XXXX ± 0.013
ANGLES: ± 0.5°

DRAWN: YCW/ZJ

MATERIAL: N/A

SOFTWARE: Pro/ENGINEER

LightPath TECHNOLOGIES
2603 CHALLENGER TECH CT. SUITE 100
ORLANDO, FL 32826

PROPRIETARY INFORMATION
THIS DOCUMENT CONTAINS PROPRIETARY INFORMATION OF LIGHTPATH TECHNOLOGIES AND IS NOT TO BE DISCLOSED OR REPRODUCED IN WHOLE OR PART, OR USED FOR MANUFACTURING FOR ANYONE OTHER THAN LIGHTPATH TECHNOLOGIES WITHOUT ITS WRITTEN CONSENT. NO RIGHT IS GRANTED TO DISCLOSE OR USE ANY INFORMATION CONTAINED IN SAID DOCUMENT.

TITLE: ADJUSTABLE ASPHERIC COLLIMATORS

SIZE: A2
DWG NO: 355375_FCAPC_X_AAC
REV: A
SCALE: 6.00
THIRD ANGLE PROJECTION
SHEET 1 OF 1

REV
SH 1
DWG NO 355375_FCAPC_X_AAC