NOTES: UNLESS OTHERWISE SPECIFIED

1. -OA1- IS THE THEORETICAL OPTIC AXIS OF THE FIRST OPTIC SURFACE.
2. -OA2- IS THE THEORETICAL OPTIC AXIS OF THE SECOND OPTIC SURFACE.
3. ASPHERIC SURFACES ARE DEFINED BY:

$$z(r) = \frac{r^2/R_c}{1+\sqrt{1-(1+K)(r/R_c)^2}} + \sum_i A_{2i} r^{2i}$$

WHERE: r= RADIAL DISTANCE FROM VERTEX IN mm

4. SURFACE DEFINITIONS:

	SURFACE 1	SURFACE 2
TYPE	ASPHERE	SPHERE
SHAPE	CX	CC
CA	Ø10.00	Ø10.00
R_C	21.319386	58.197729
K	-0.443995	0.000000
A_2	0.000000E0	0.000000E0
A_4	0.000000E0	0.000000E0
A_6	0.000000E0	0.000000E0
A_8	0.000000E0	0.000000E0
A_{10}	0.000000E0	0.000000E0
A_{12}	0.000000E0	0.000000E0
A_{14}	0.000000E0	0.000000E0
A_{16}	0.000000E0	0.000000E0

5. NOMINAL DESIGN PARAMETERS:

DESIGN WAVELENGTH	2534 nm
W.D.	16.33 mm
N.A.	0.23
E.F.L.	19.0mm

6. FEATURES IDENTIFIED AS ℄ ARE CRITICAL CHARACTERISTICS. CRITICAL CHARACTERSTICS ARE GUARANTEED IN PRODUCTION.

7. THIS ELEMENT MUST MEET THE SCRATCH/DIG REQUIREMENTS ACROSS THE FULL CLEAR APERTURES INDICATED, BOTH SIDES, PER LIGHTPATH PWI INS-8.2-05P6.℄ -00: S/D: 80/50, DEFECTS <10 MICRONS ARE IGNORED.

8 SET BY TOLERANCES OF PRESS TOOLING. SPECIFICATION NOT MEASURED DIRECTLY.

	RADIUS ERROR	IRREGULARITY	CENTRATION TO OD 8	TILT TO OD 8
S1	±0.036 mm	< 329.0 nm PV < 109.7 nm RMS	< 0.007 mm	< 0.6 mrad
S2	±0.267 mm			

REVISION HISTORY

REV	DCO	DESCRIPTION	DATE	INITIALS
A	3642	INITIAL RELEASE	11/25/13	DS
B	4126	S2 B.RADIUS 3.00 WAS .10 REMOVED RADIUS ERROR, ROUGHNESS, IRREGULARITY	04/06/15	DS
C	6496	DRAWING FORMAT UPDATED, S/D NOTE UPDATED	04/14/21	YK

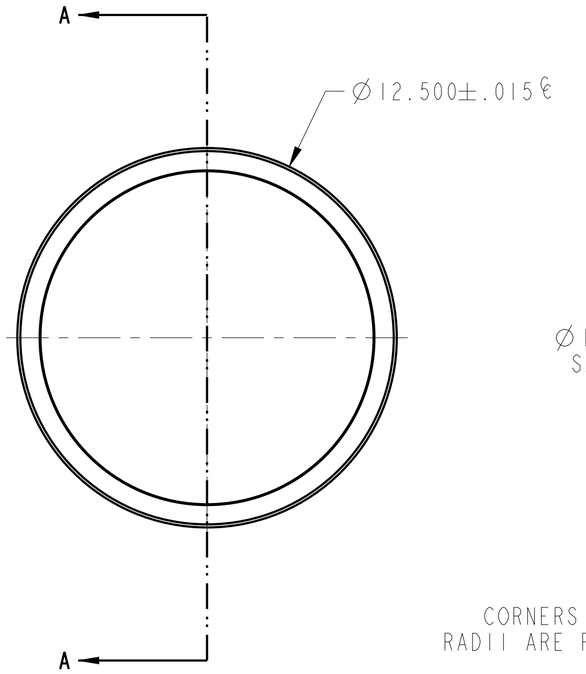

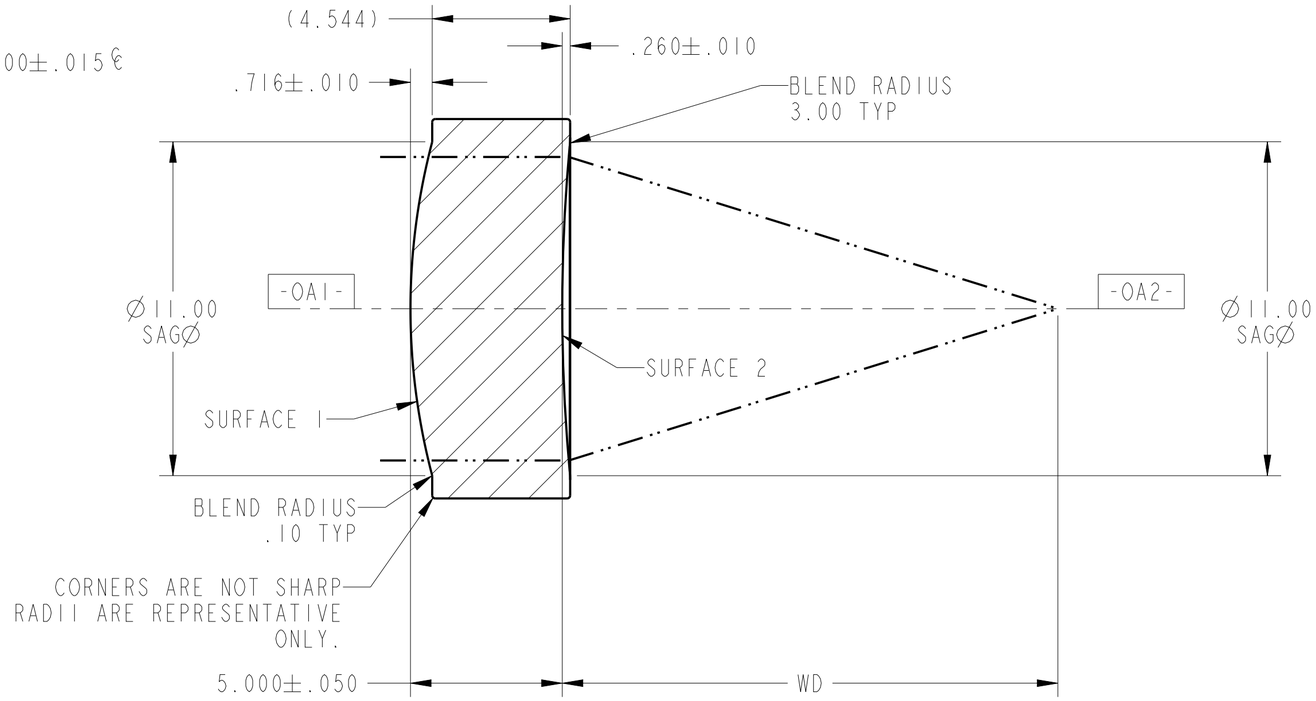

SECTION A-A

UNLESS OTHERWISE SPECIFIED
DIMENSIONS ARE IN MM.
DECIMAL TOLERANCES ARE:
.X ± 0.25
.XX ± 0.10
.XXX ± 0.025
.XXXX ± 0.013
ANGLES: ± 0.5°

LightPath TECHNOLOGIES
2603 CHALLENGER TECH CT. SUITE 100
ORLANDO, FL 32826

PROPRIETARY INFORMATION
THIS DOCUMENT CONTAINS PROPRIETARY INFORMATION OF LIGHTPATH TECHNOLOGIES AND IS NOT TO BE DISCLOSED OR REPRODUCED IN WHOLE OR PART, OR USED FOR MANUFACTURING FOR ANYONE OTHER THAN LIGHTPATH TECHNOLOGIES WITHOUT ITS WRITTEN CONSENT. NO RIGHT IS GRANTED TO DISCLOSE OR USE ANY INFORMATION CONTAINED IN SAID DOCUMENT.

TITLE: LENS CODE 390042

DRAWN: DS\ORL

MATERIAL: BD2(m)

SIZE: A2

DWG NO: 0390042

REV: C

SOFTWARE: Pro/ENGINEER

SCALE: 7.00

THIRD ANGLE PROJECTION

SHEET 1 OF 1

REV C
SH 1
DWG NO 0390042