NOTES: UNLESS OTHERWISE SPECIFIED

1. -OA1- IS THE THEORETICAL OPTIC AXIS OF THE FIRST OPTIC SURFACE.

2. ASPHERIC SURFACES ARE DEFINED BY:

$$z(r) = \frac{r^2/R_c}{1+\sqrt{1-(1+K)(r/R_c)^2}} + \sum_i A_{2i} r^{2i}$$

WHERE: r = RADIAL DISTANCE FROM VERTEX IN mm

3. SURFACE DEFINITIONS:

	SURFACE 1	SURFACE 2
TYPE	ASPHERE	PLANO
SHAPE	CX	PL
CA	Ø7.56	Ø6.78
R_C	9.648510	PLANO
K	-1.046727	0.000000
A_2	0.000000E0	0.000000E0
A_4	-1.375609E-4	0.000000E0
A_6	-4.715630E-7	0.000000E0
A_8	1.282571E-8	0.000000E0
A_{10}	0.000000E0	0.000000E0
A_{12}	0.000000E0	0.000000E0
A_{14}	0.000000E0	0.000000E0
A_{16}	0.000000E0	0.000000E0

4. NOMINAL DESIGN PARAMETERS:

DESIGN WAVELENGTH	4100 nm
W.D.	5.000 mm
N.A.	0.561
E.F.L.	6.0mm

5. FEATURES IDENTIFIED AS ℄ ARE CRITICAL CHARACTERISTICS. CRITICAL CHARACTERSTICS ARE GUARANTEED IN PRODUCTION.

6. THIS ELEMENT MUST MEET THE SCRATCH/DIG REQUIREMENTS ACROSS THE FULL CLEAR APERTURES INDICATED, BOTH SIDES, PER LIGHTPATH PWI INS-8.2-05P6.℄
-00: S/D: 80/50, DEFECTS <10 MICRONS ARE IGNORED.

[7] SET BY TOLERANCES OF PRESS TOOLING. SPECIFICATION NOT MEASURED DIRECTLY.

SURFACE	RADIUS ERROR	IRREGULARITY	CENTRATION TO OD [7]	TILT TO OD [7]
S1	±0.012 mm	< 316.5 nm PV < 105.5 nm RMS	< 0.007 mm	< 0.6 mrad
S2	N/A			

REVISION HISTORY

REV	DCO	DESCRIPTION	DATE	INITIALS
A	2694	INITIAL RELEASE	03/04/11	INEWCOMB
B	4075	OBS SPEC; NOTES UPDATED	02/13/15	EF
C	6486	DRAWING FORMAT UPDATED, S/D NOTE UPDATED	04/05/21	YK

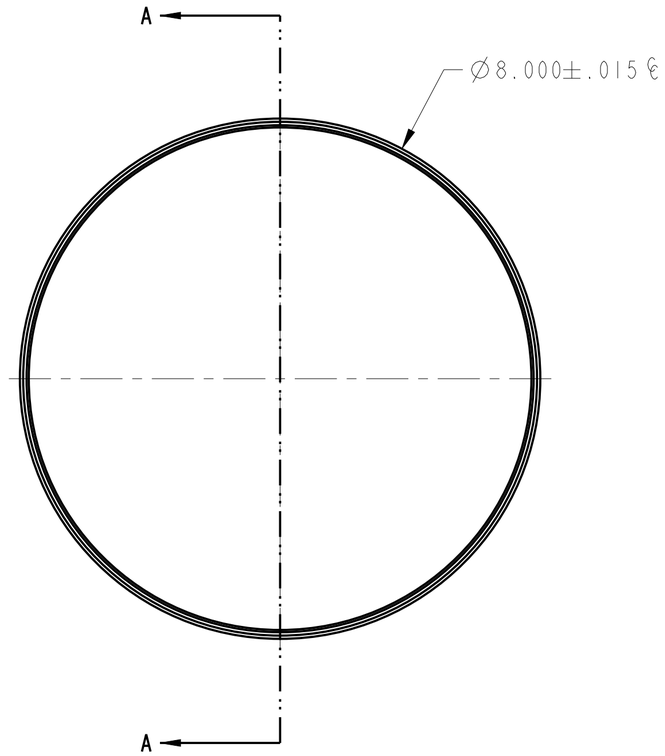

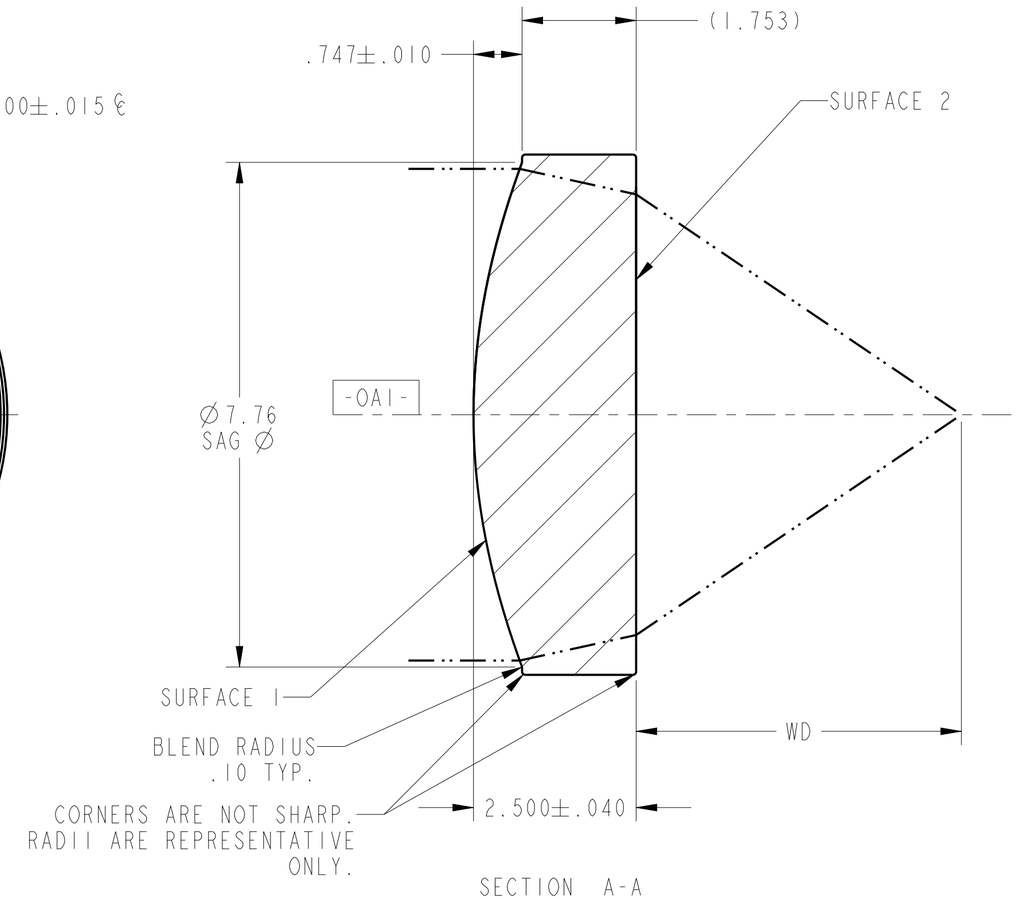

SECTION A-A

UNLESS OTHERWISE SPECIFIED
DIMENSIONS ARE IN MM.
DECIMAL TOLERANCES ARE:
.X ± 0.25
.XX ± 0.10
.XXX ± 0.025
.XXXX ± 0.013
ANGLES: ± 0.5°

LightPath TECHNOLOGIES
2603 CHALLENGER TECH CT. SUITE 100
ORLANDO, FL 32826

PROPRIETARY INFORMATION
THIS DOCUMENT CONTAINS PROPRIETARY INFORMATION OF LIGHTPATH TECHNOLOGIES AND IS NOT TO BE DISCLOSED OR REPRODUCED IN WHOLE OR PART, OR USED FOR MANUFACTURING FOR ANYONE OTHER THAN LIGHTPATH TECHNOLOGIES WITHOUT ITS WRITTEN CONSENT. NO RIGHT IS GRANTED TO DISCLOSE OR USE ANY INFOMATION CONTAINED IN SAID DOCUMENT.

TITLE: LENS CODE 390028

DRAWN: INEWCOMB\ORL

MATERIAL: BD2(m)

SIZE: A2

DWG NO: 0390028

REV: C

SOFTWARE: Pro/ENGINEER

SCALE: 15.00

THIRD ANGLE PROJECTION

SHEET 1 OF 1

REV C

SH 1

DWG NO 0390028

RoHS