NOTES: UNLESS OTHERWISE SPECIFIED

1. -OA1- IS THE THEORETICAL OPTIC AXIS OF THE FIRST OPTIC SURFACE.

2. ASPHERIC SURFACES ARE DEFINED BY:

$$z(r) = \frac{r^2/R_c}{1+\sqrt{1-(1+K)(r/R_c)^2}} + \sum_i A_{2i} r^{2i}$$

WHERE: r= RADIAL DISTANCE FROM VERTEX IN mm

3. SURFACE DEFINITIONS:

| | SURFACE 1 | SURFACE 2 |
|---|---|---|
| TYPE | ASPHERE | PLANO |
| SHAPE | CX | PL |
| CA | Ø2.60 | Ø2.16 |
| $R_C$ | 2.447300 | PLANO |
| K | -0.762500 | 0.000000 |
| $A_2$ | 0.000000E0 | 0.000000E0 |
| $A_4$ | -6.482300E-3 | 0.000000E0 |
| $A_6$ | -1.325200E-3 | 0.000000E0 |
| $A_8$ | 1.900600E-4 | 0.000000E0 |
| $A_{10}$ | 0.000000E0 | 0.000000E0 |
| $A_{12}$ | 0.000000E0 | 0.000000E0 |
| $A_{14}$ | 0.000000E0 | 0.000000E0 |
| $A_{16}$ | 0.000000E0 | 0.000000E0 |

4. NOMINAL DESIGN PARAMETERS:

| | |
|---|---|
| DESIGN WAVELENGTH | 2300 nm |
| W.D. | 1.24 mm |
| N.A. | 0.72 |
| E.F.L. | 1.5mm |

5. FEATURES IDENTIFIED AS ℄ ARE CRITICAL CHARACTERISTICS.
CRITICAL CHARACTERSTICS ARE GUARANTEED IN PRODUCTION.

6. THIS ELEMENT MUST MEET THE SCRATCH/DIG REQUIREMENTS ACROSS THE FULL CLEAR APERTURES INDICATED, BOTH SIDES, PER LIGHTPATH PWI INS-8.2-05P6.℄
-00: S/D: 80/50, DEFECTS <10 MICRONS ARE IGNORED.

7 SET BY TOLERANCES OF PRESS TOOLING. SPECIFICATION NOT MEASURED DIRECTLY.

| | RADIUS ERROR | IRREGULARITY | CENTRATION TO OD 7 | TILT TO OD 7 |
|---|---|---|---|---|
| S1 | ±0.007 mm | < 316.4 nm PV<br>< 105.5 nm RMS | < 0.007 mm | < 0.6 mrad |
| S2 | N/A | | | |

REVISION HISTORY

| REV | DCO | DESCRIPTION | DATE | INITIALS |
|---|---|---|---|---|
| A | 2141 | INITIAL RELEASE | 06/03/09 | ASYMMONS |
| B | 2811 | PREFORM CHNGD TO 0313074 & SPEC ADD | 06/09/11 | IN |
| C | 3032 | REDRAWN USING UPDATED PROGRAM | 12/14/11 | IN |
| D | 6496 | DRAWING FORMAT UPDATED<br>S/D NOTE UPDATED, WINDOW NOTE UPDATED | 04/12/21 | YK |

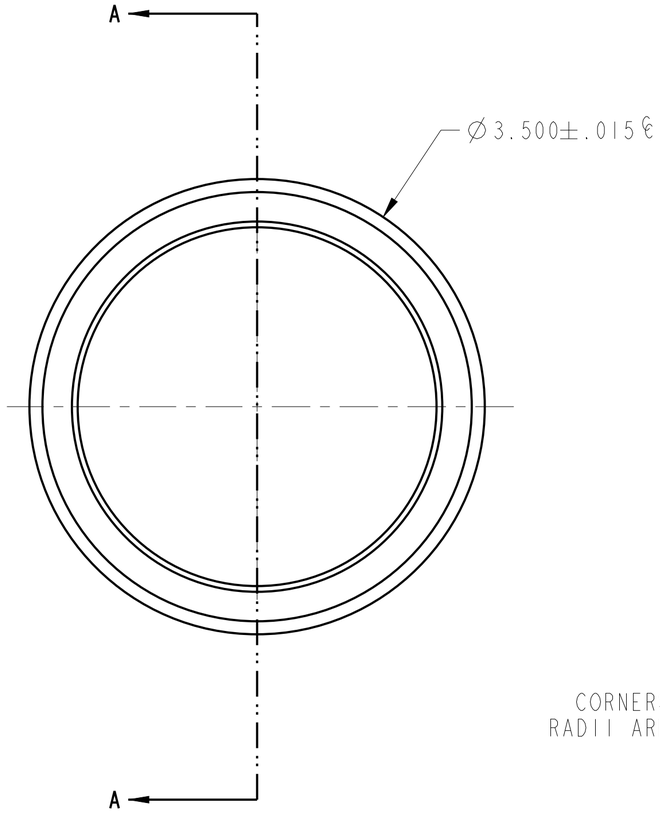


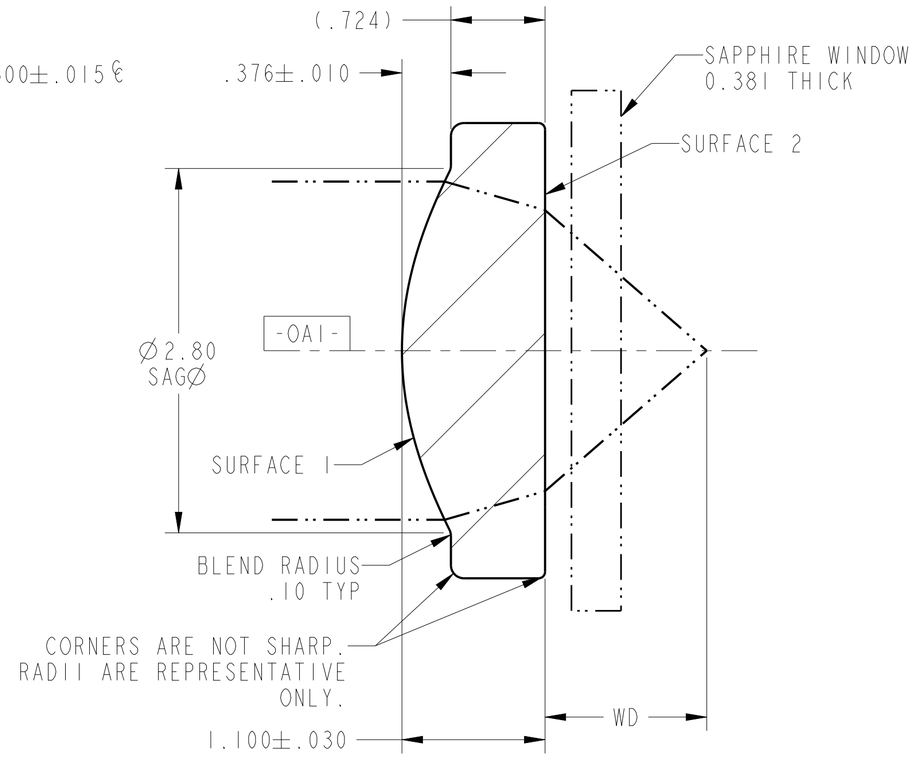


SECTION A-A

UNLESS OTHERWISE SPECIFIED
DIMENSIONS ARE IN MM.
DECIMAL TOLERANCES ARE:
.X ± 0.25
.XX ± 0.10
.XXX ± 0.025
.XXXX ± 0.013
ANGLES: ± 0.5°

LightPath TECHNOLOGIES
2603 CHALLENGER TECH CT. SUITE 100
ORLANDO, FL 32826

PROPRIETARY INFORMATION
THIS DOCUMENT CONTAINS PROPRIETARY INFORMATION OF LIGHTPATH TECHNOLOGIES AND IS NOT TO BE DISCLOSED OR REPRODUCED IN WHOLE OR PART, OR USED FOR MANUFACTURING FOR ANYONE OTHER THAN LIGHTPATH TECHNOLOGIES WITHOUT ITS WRITTEN CONSENT. NO RIGHT IS GRANTED TO DISCLOSE OR USE ANY INFOMATION CONTAINED IN SAID DOCUMENT.

TITLE: LENS CODE 390017

DRAWN: ASYMMONS\ORL

MATERIAL: BD2(m)

SIZE: A2

DWG NO: 0390017

REV: D

SOFTWARE: Pro/ENGINEER

SCALE: 30.00

THIRD ANGLE PROJECTION

SHEET 1 OF 1

REV D
SH 1
DWG NO 0390017