REVISION HISTORY				
REV	DCO	DESCRIPTION	DATE	INITIALS
A	6142	INITIAL RELEASE	03/19/20	JC
B	6465	ADD WFE NOTE	03/08/2021	PS

NOTES: UNLESS OTHERWISE SPECIFIED

1. -OA1- IS THE THEORETICAL OPTIC AXIS OF THE FIRST OPTIC SURFACE.

2. -OA2- IS THE THEORETICAL OPTIC AXIS OF THE SECOND OPTIC SURFACE.

3. ASPHERIC SURFACES ARE DEFINED BY:

$$z(r) = \frac{r^2/R_c}{1+\sqrt{1-(1+K)(r/R_c)^2}} + \sum_i A_{2i} r^{2i}$$

WHERE: r = RADIAL DISTANCE FROM VERTEX IN mm

4. SURFACE DEFINITIONS:

	SURFACE 1	SURFACE 2
TYPE	ASPHERE	ASPHERE
SHAPE	CX	CX
CA	∅0.34	∅0.49
R_C	0.294054	-0.538915
K	-11.471700	-0.799126
A_2	0.000000E0	0.000000E0
A_4	7.970180E0	3.665490E-1
A_6	-1.059720E2	9.618110E0
A_8	1.008080E3	1.111920E1
A_{10}	-4.071390E3	5.547570E2
A_{12}	0.000000E0	0.000000E0
A_{14}	0.000000E0	0.000000E0
A_{16}	0.000000E0	0.000000E0

5. NOMINAL DESIGN PARAMETERS

DESIGN WAVELENGTH	1310 nm
W.D.	0.17 mm
N.A.	0.6
E.F.L.	0.38mm

6. FEATURES IDENTIFIED AS ℄ ARE CRITICAL CHARACTERISTICS.
CRITICAL CHARACTERISTICS ARE GUARANTEED IN PRODUCTION.

7. THIS ELEMENT MUST MEET THE SCRATCH/DIG REQUIREMENTS ACROSS THE FULL CLEAR APERTURES INDICATED, BOTH SIDES, PER LIGHTPATH PWI INS-8.2-05P6.℄
-00: S/D: 40/20

8. THIS ELEMENT IS USED AS A COLLIMATING LENS.
WAVEFRONT ERROR: < 0.150 WAVES RMS @ 633.0 nm.
PER LIGHTPATH PWI INS-8.2-13

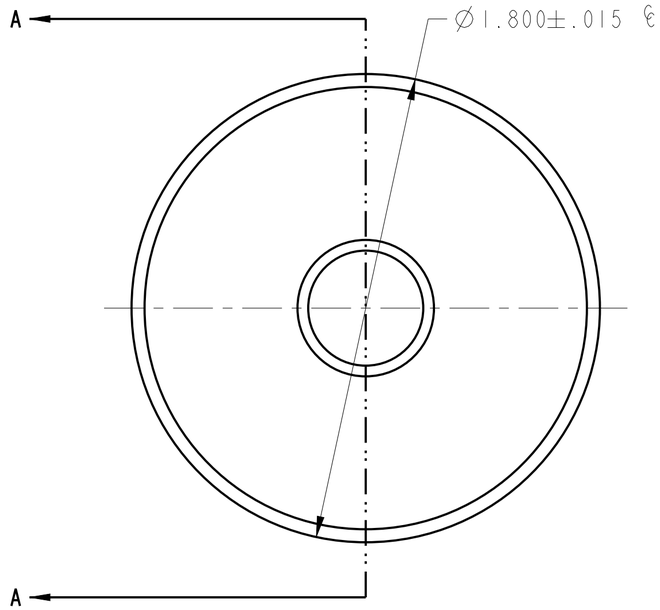

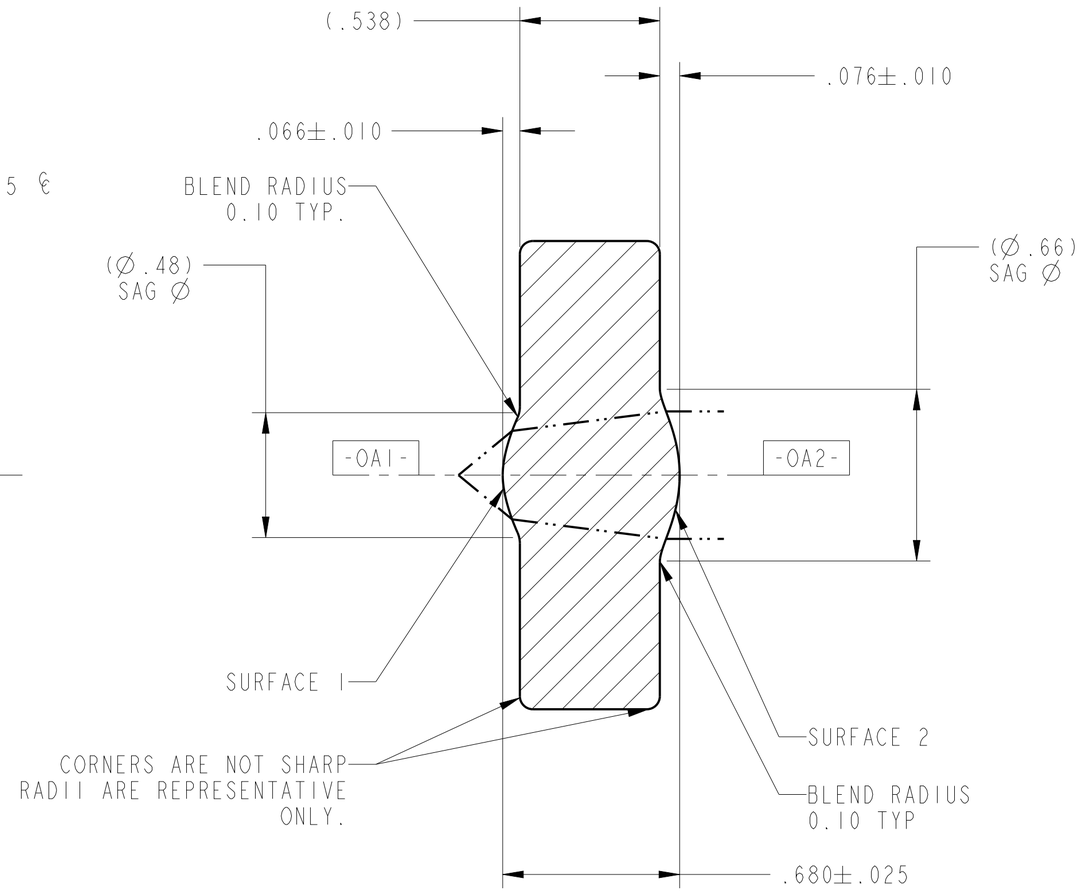

SECTION A-A

RoHS

UNLESS OTHERWISE SPECIFIED
DIMENSIONS ARE IN MM.
DECIMAL TOLERANCES ARE:
.X ± 0.25
.XX ± 0.10
.XXX ± 0.025
.XXXX ± 0.013
ANGLES: ± 0.5°

LightPath TECHNOLOGIES
2603 CHALLENGER TECH CT. SUITE 100
ORLANDO, FL 32826

PROPRIETARY INFORMATION
THIS DOCUMENT CONTAINS PROPRIETARY INFORMATION OF LIGHTPATH TECHNOLOGIES AND IS NOT TO BE DISCLOSED OR REPRODUCED IN WHOLE OR PART, OR USED FOR MANUFACTURING FOR ANYONE OTHER THAN LIGHTPATH TECHNOLOGIES WITHOUT ITS WRITTEN CONSENT. NO RIGHT IS GRANTED TO DISCLOSE OR USE ANY INFORMATION CONTAINED IN SAID DOCUMENT.

TITLE
LENS CODE 355641

DRAWN
JC\ORL

MATERIAL
D-ZLaF52LA(m)

SIZE
A2

DWG NO
0355641

REV
B

SOFTWARE
Pro/ENGINEER

SCALE: 60.00

THIRD ANGLE PROJECTION

SHEET 1 OF 1

REV B
SH 1
DWG NO 0355641