RADIUS			RADIUS ERROR	ROUGHNESS	IRREGULARITY	CA	CT	WD	NA	DESIGN WAVELENGTH	EFL	WAVEFRONT
S1	ASPHERE	CX	± 0.016 mm	<10nm RMS	<316.5nm P-V <105.5nm RMS	∅2.60	1.786±0.030	3.80	0.27	940	4.80±1.0%	< 0.071 wave(s) RMS @ 633nm
S2	PLANO	PL	N/A	<10nm RMS	<316.5nm P-V <105.5nm RMS	∅2.12						

REVISION HISTORY

REV	DCO	DESCRIPTION	DATE	INITIALS
A	2826	INITIAL RELEASE	06/28/11	AS
B	3773	UPDATED HOLDER PER DCO 2935	04/21/18	DS
C	4444	RMS < 0.071 WAS <0.040	02/17/16	DS
D	5424	HOLDER MATERIAL WAS 416 SS	06/11/18	TH
E	5501	ADDED TOL TO DIAMETRAL DIMENSION	08/13/18	CK

NOTES: UNLESS OTHERWISE SPECIFIED

1. MATERIAL: D-ZLAF52LA, PREFORM PART NUMBER: 028I124.
   HOLDER MATERIAL: SF20F-SST
   HOLDER P/N: 6100572

2. ASPHERIC SURFACES ARE DEFINED BY:

$$Z(Y)=\frac{Y^2}{R*(1+[1-(1+K)*Y^2/R^2]^{0.5})} + A_2*Y^2 + A_4*Y^4 + A_6*Y^6 + A_8*Y^8 + A_{10}*Y^{10} + A_{12}*Y^{12} + A_{14}*Y^{14} + A_{16}*Y^{16}$$

WHERE: Y= RADIAL DISTANCE FROM VERTEX IN mm

3. SURFACE DEFINITIONS:

	SURFACE 1	SURFACE 2
RADIUS	3.779098	PLANO
K	-0.657944	0.000000
A_2	0.000000E0	0.000000E0
A_4	1.782809E-5	0.000000E0
A_6	-1.399249E-5	0.000000E0
A_8	-5.650841E-7	0.000000E0
A_{10}	0.000000E0	0.000000E0
A_{12}	0.000000E0	0.000000E0
A_{14}	0.000000E0	0.000000E0
A_{16}	0.000000E0	0.000000E0

4. THIS ELEMENT MUST MEET THE SCRATCH/DIG REQUIREMENTS ACROSS THE FULL CLEAR APERTURES INDICATED, BOTH SIDES, PER MIL-PRF-13830B AS PROVIDED IN LIGHTPATH SPECIFICATION: 9000728.

5. THIS ELEMENT IS USED AS A COLLIMATING LENS. TEST METHODS AND FREQUENCIES ARE DEFINED AS PROVIDED IN LIGHTPATH SPECIFICATION: 9000728.

RoHS

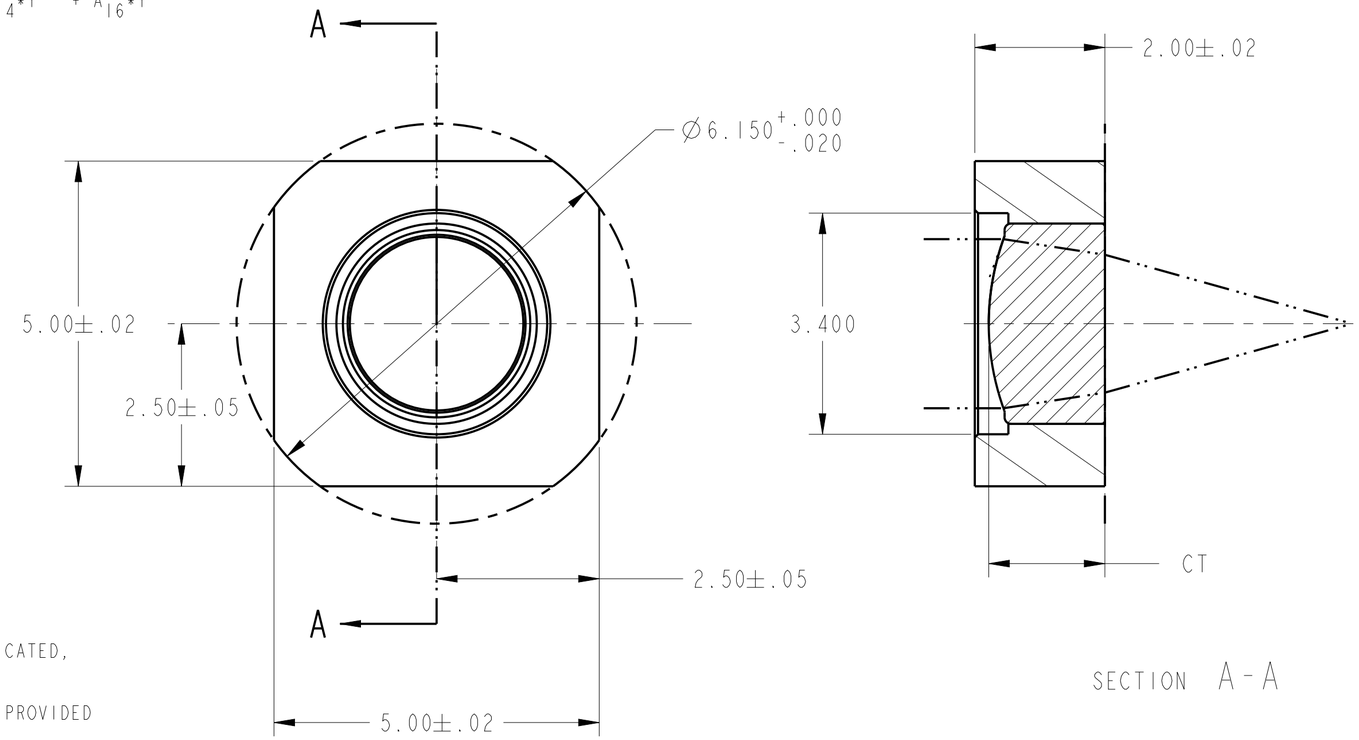

ITEM	PART #	DESCRIPTION	QTY
1	6100572	HOLDER, MIP, 355317, SF20F-SST	1

UNLESS OTHERWISE SPECIFIED
DIMENSIONS ARE IN MM.
DECIMAL TOLERANCES ARE:
.X ± 0.25
.XX ± 0.10
.XXX ± 0.025
.XXXX ± 0.013
ANGLES: ± 0.5°

LightPath TECHNOLOGIES
2603 CHALLENGER TECH CT. SUITE 100
ORLANDO, FL 32826

PROPRIETARY INFORMATION
THIS DOCUMENT CONTAINS PROPRIETARY INFORMATION OF LIGHTPATH TECHNOLOGIES AND IS NOT TO BE DISCLOSED OR REPRODUCED IN WHOLE OR PART, OR USED FOR MANUFACTURING FOR ANYONE OTHER THAN LIGHTPATH TECHNOLOGIES WITHOUT ITS WRITTEN CONSENT. NO RIGHT IS GRANTED TO DISCLOSE OR USE ANY INFOMATION CONTAINED IN SAID DOCUMENT.

DRAWN: AS\ORL

TITLE: LENS CODE, 0355317

MATERIAL: N/A
SIZE: A2
DWG NO: 0355317
REV: E
SOFTWARE: Pro/ENGINEER
SCALE: 15.00
THIRD ANGLE PROJECTION
SHEET 1 OF 1

DWG NO 0355317
REV E
SH 1