NOTES: UNLESS OTHERWISE SPECIFIED

1. LENS MATERIAL: D-ZLAF52LA
   HOLDER MATERIAL: SF20F

2. -OA1- IS THE THEORETICAL OPTIC AXIS OF THE FIRST OPTIC SURFACE.

3. ASPHERIC SURFACES ARE DEFINED BY:

$$z(r) = \frac{r^2/R_c}{1+\sqrt{1-(1+K)(r/R_c)^2}} + \sum_i A_{2i} r^{2i}$$

WHERE: r = RADIAL DISTANCE FROM VERTEX IN mm

4. SURFACE DEFINITIONS:

	SURFACE 1	SURFACE 2
TYPE	ASPHERE	PLANO
SHAPE	CX	PL
CA	∅0.85	∅0.74
R_C	1.536161	PLANO
K	-0.999999	0.000000
A_2	0.000000E0	0.000000E0
A_4	1.140503E-2	0.000000E0
A_6	-4.728601E-4	0.000000E0
A_8	-1.973419E-4	0.000000E0
A_{10}	0.000000E0	0.000000E0
A_{12}	0.000000E0	0.000000E0
A_{14}	0.000000E0	0.000000E0
A_{16}	0.000000E0	0.000000E0

5. NOMINAL DESIGN PARAMETERS:

DESIGN WAVELENGTH	1550nm
W.D.	1.650mm
N.A.	0.21
E.F.L.	1.98mm

6. FEATURES IDENTIFIED AS ℄ ARE CRITICAL CHARACTERISTICS.
   CRITICAL CHARACTERISTICS ARE GUARANTEED IN PRODUCTION.

7. THIS ELEMENT MUST MEET THE SCRATCH/DIG REQUIREMENTS ACROSS THE FULL CLEAR APERTURES INDICATED, BOTH SIDES, PER LIGHTPATH PWI INS-8.2-05P6.℄
   -00: S/D: 10/5

8. THIS ELEMENT IS USED AS A COLLIMATING LENS .
   WAVEFRONT ERROR: <0.080 WAVES RMS @ 633.0 nm
   PER LIGHTPATH PWI INS-8.2-13 .

SURFACE	RADIUS ERROR (mm)	RMS IRREGULARITY (nm)	PV IRREGULARITY (nm)
S1	±0.026	<50	<100
S2	PLANO	<50	<100

REVISION HISTORY

REV	DCO	DESCRIPTION	DATE	INITIALS
A	4891	INITIAL RELEASE	2/20/17	CL
B	4992	CHANGED THE HEADING IN SPEC TABLE	6/7/17	CL
C	5047	CHANGE TO MIP HOLDER GEOMETRY	08/03/17	CL
D	5484	ADD ∅4.400 FLANGE	07/27/18	JC
E	5745	ADDED SURFACE FORM TABLE AND WAVEFRONT ERROR SPEC	3/7/19	AG
F	5999	1.140, WAS 1.150	11/1/19	YK

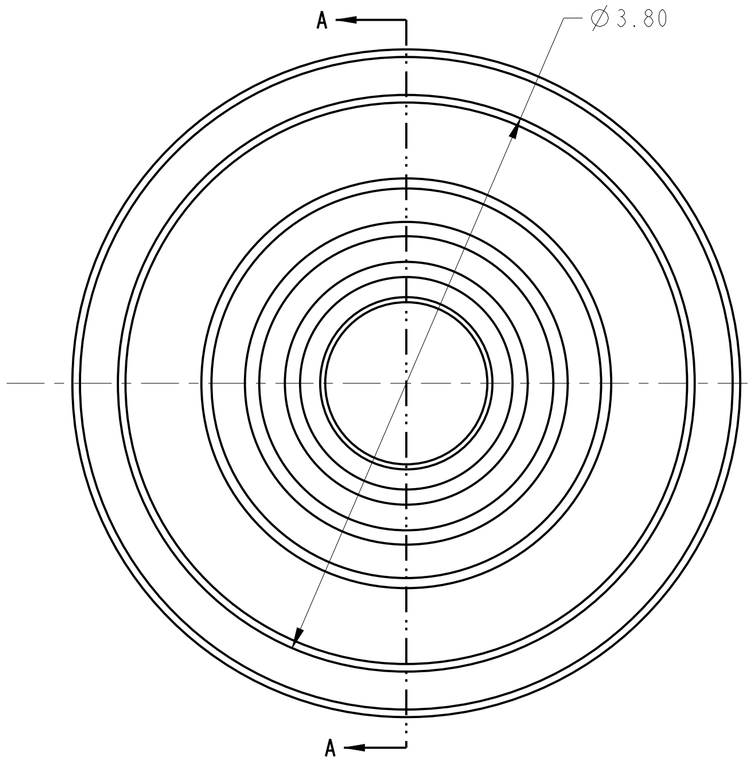

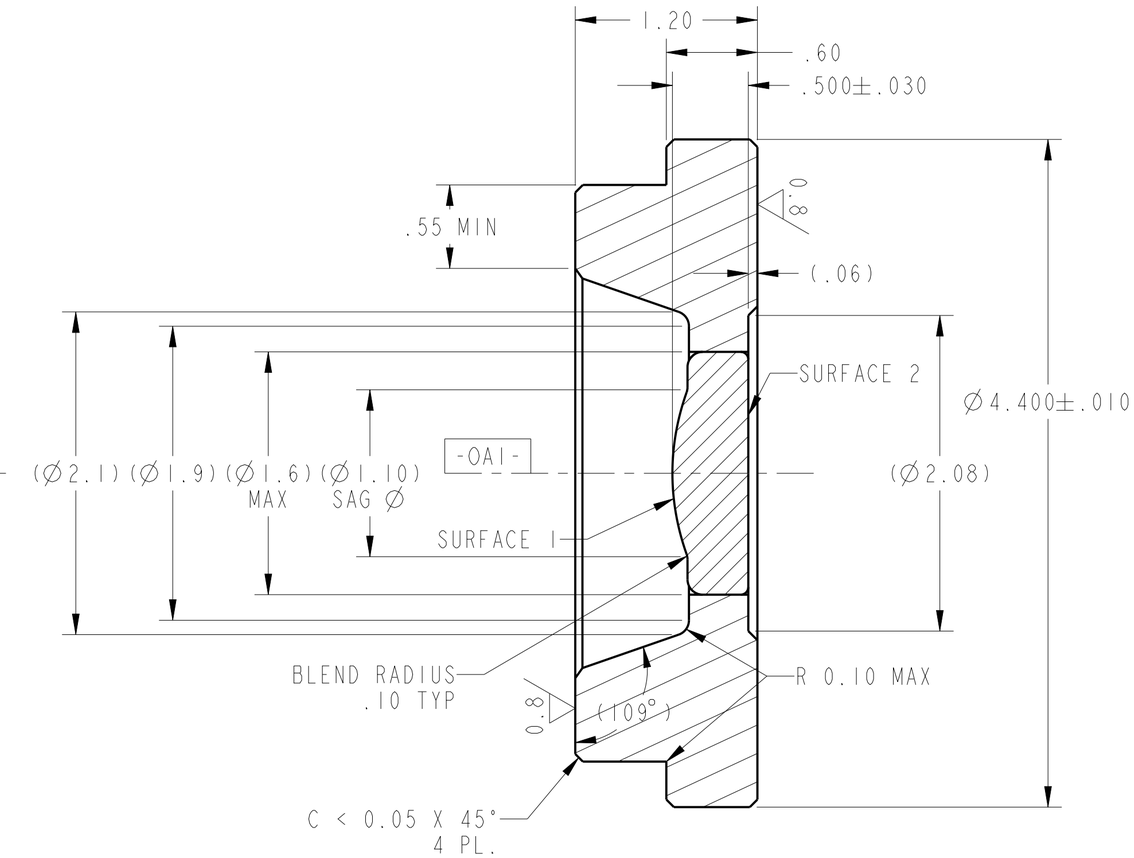

SECTION A-A

UNLESS OTHERWISE SPECIFIED
DIMENSIONS ARE IN MM.
DECIMAL TOLERANCES ARE:
.X ± 0.25
.XX ± 0.10
.XXX ± 0.025
.XXXX ± 0.013
ANGLES: ± 0.5°

LightPath TECHNOLOGIES
2603 CHALLENGER TECH CT. SUITE 100
ORLANDO, FL 32826

PROPRIETARY INFORMATION
THIS DOCUMENT CONTAINS PROPRIETARY INFORMATION OF LIGHTPATH TECHNOLOGIES AND IS NOT TO BE DISCLOSED OR REPRODUCED IN WHOLE OR PART, OR USED FOR MANUFACTURING FOR ANYONE OTHER THAN LIGHTPATH TECHNOLOGIES WITHOUT ITS WRITTEN CONSENT. NO RIGHT IS GRANTED TO DISCLOSE OR USE ANY INFOMATION CONTAINED IN SAID DOCUMENT.

TITLE: LENS CODE 355087

DRAWN: CL\ORL

MATERIAL: SEE NOTES

SIZE: A2

DWG NO: 0355087

REV: F

SOFTWARE: Pro/ENGINEER

SCALE: 35.00

THIRD ANGLE PROJECTION

SHEET 1 OF 1

REV F

SH 1

DWG NO 0355087

RoHS