RADIUS			RADIUS ERROR	ROUGHNESS	IRREGULARITY	CA	CT	WD	NA	DESIGN WAVELENGTH	EFL	WAVEFRONT
S1	ASPHERE	CX	± 0.007 mm	<10nm RMS	<316.5nm P-V <105.5nm RMS	∅7.00	3.220±0.020	9.25	0.32	635	11.2±1.0%	< 0.078 WAVES RMS @ 633.0nm
S2	PLANO	PL	N/A	<10nm RMS	<316.5nm P-V <105.5nm RMS	∅6.08						

REVISION HISTORY

REV	DCO	DESCRIPTION	DATE	INITIALS
A	3205	INITIAL RELEASE	08/20/12	AS
B	3279	WAVEFRONT WAS 0.05	10/18/12	AS

NOTES: UNLESS OTHERWISE SPECIFIED

1. -OA1- IS THE THEORETICAL OPTIC AXIS OF THE FIRST OPTIC SURFACE.

2. MATERIAL: D-ZK3

3. ASPHERIC SURFACES ARE DEFINED BY:

$$Z(Y)=\frac{Y^2}{R*(1+[1-(1+K)*Y^2/R^2]^{0.5})}+A_2*Y^2+A_4*Y^4+A_6*Y^6+A_8*Y^8+A_{10}*Y^{10}+A_{12}*Y^{12}+A_{14}*Y^{14}+A_{16}*Y^{16}$$

WHERE: Y= RADIAL DISTANCE FROM VERTEX IN mm

4. SURFACE DEFINITIONS:

	SURFACE 1	SURFACE 2
RADIUS	6.544007	PLANO
K	-0.965302	0.000000
A_2	0.000000E0	0.000000E0
A_4	1.791160E-4	0.000000E0
A_6	6.391567E-7	0.000000E0
A_8	3.197897E-10	0.000000E0
A_{10}	0.000000E0	0.000000E0
A_{12}	0.000000E0	0.000000E0
A_{14}	0.000000E0	0.000000E0
A_{16}	0.000000E0	0.000000E0

5. THIS ELEMENT MUST MEET THE SCRATCH/DIG REQUIREMENTS ACROSS THE FULL CLEAR APERTURES INDICATED, BOTH SIDES, PER MIL-PRF-13830B AS PROVIDED IN LIGHTPATH SPECIFICATION: 9000779.

6. THIS ELEMENT IS USED AS A COLLIMATING LENS. TEST METHODS AND FREQUENCIES ARE DEFINED AS PROVIDED IN LIGHTPATH SPECIFICATION: 9000779.

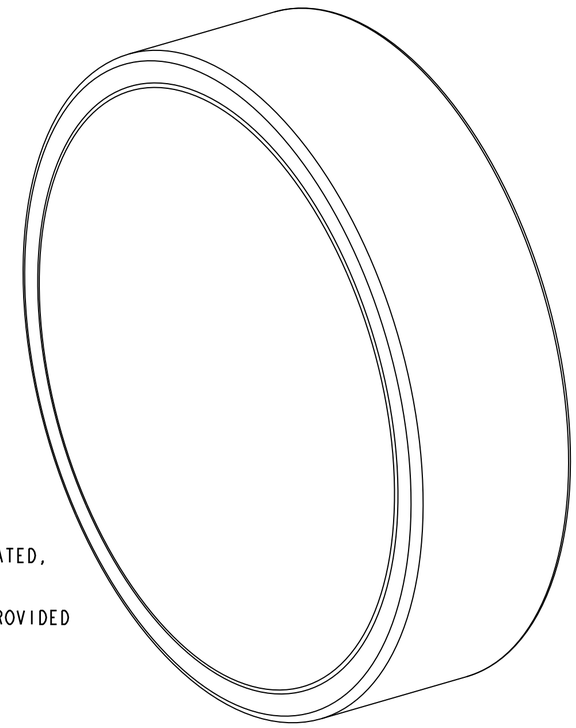

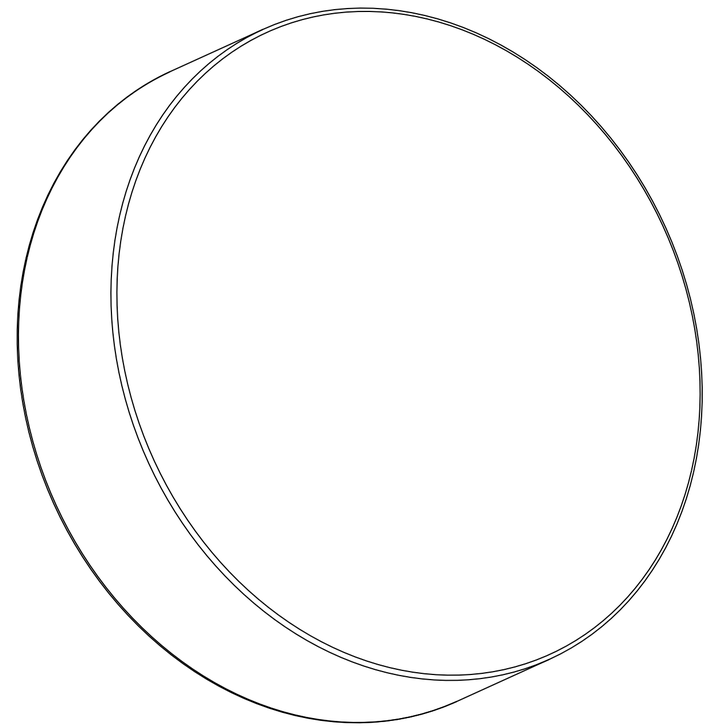

RoHS

UNLESS OTHERWISE SPECIFIED
DIMENSIONS ARE IN MM.
DECIMAL TOLERANCES ARE:
.X ± 0.25
.XX ± 0.10
.XXX ± 0.025
.XXXX ± 0.013
ANGLES: ± 0.5°

DRAWN: AS\ORL

MATERIAL: SEE NOTES

SOFTWARE: Pro/ENGINEER

LightPath® TECHNOLOGIES™
2603 CHALLENGER TECH CT. SUITE 100
ORLANDO, FL 32826

PROPRIETARY INFORMATION
THIS DOCUMENT CONTAINS PROPRIETARY INFORMATION OF LIGHTPATH TECHNOLOGIES AND IS NOT TO BE DISCLOSED OR REPRODUCED IN WHOLE OR PART, OR USED FOR MANUFACTURING FOR ANYONE OTHER THAN LIGHTPATH TECHNOLOGIES WITHOUT ITS WRITTEN CONSENT. NO RIGHT IS GRANTED TO DISCLOSE OR USE ANY INFOMATION CONTAINED IN SAID DOCUMENT.

TITLE: LENS CODE 354312

SIZE: A2 | DWG NO: 0354312 | REV: B

SCALE: 20.00 | THIRD ANGLE PROJECTION | SHEET 1 OF 2

REV B | SH 1 | DWG NO 0354312

REVISION HISTORY				
REV	DCO	DESCRIPTION	DATE	INITIALS
SEE SHEET 1				

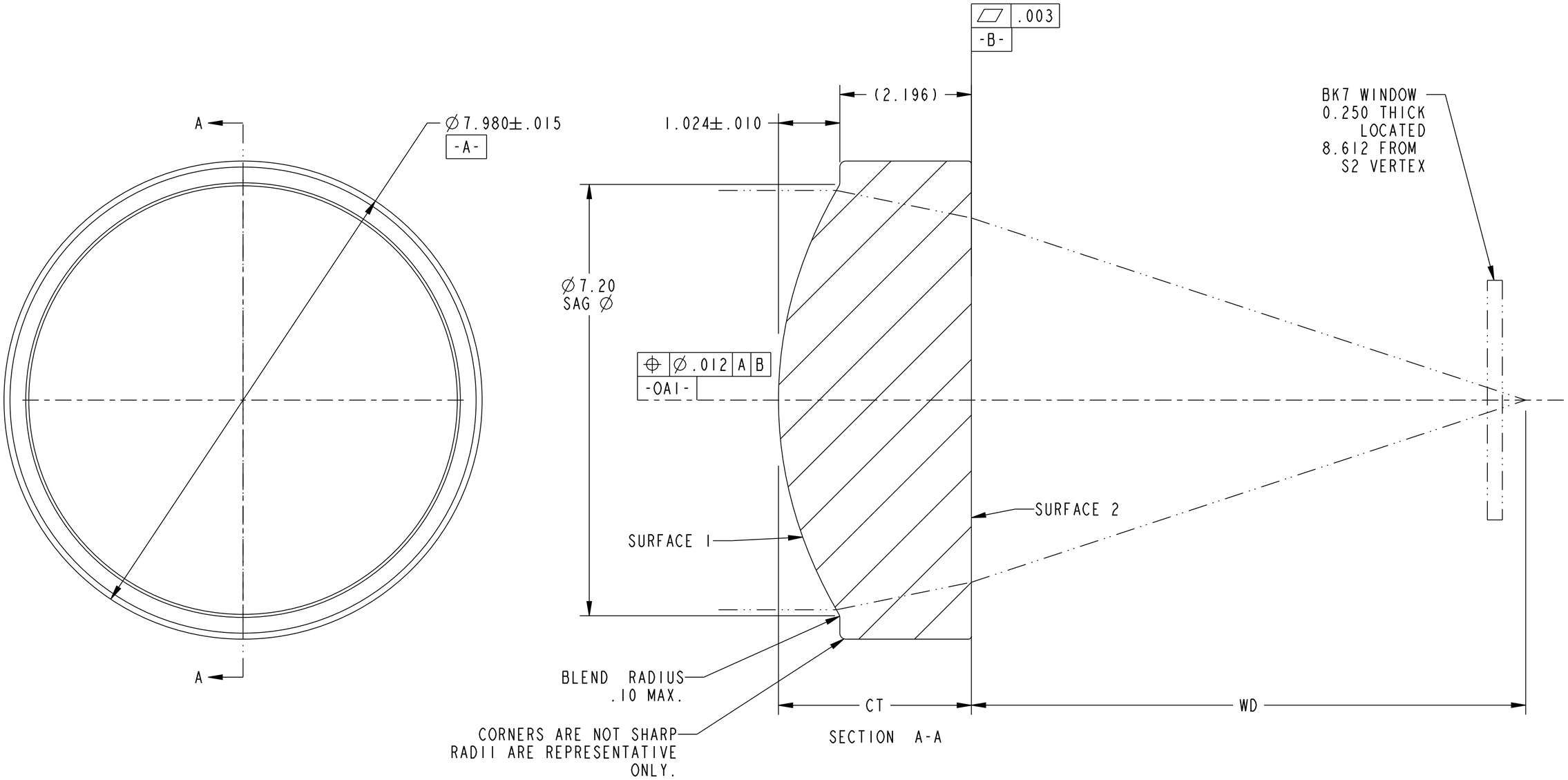

LightPath® TECHNOLOGIES™
2603 CHALLENGER TECH CT. SUITE 100
ORLANDO, FL 32826

PROPRIETARY INFORMATION
THIS DOCUMENT CONTAINS PROPRIETARY INFORMATION OF LIGHTPATH TECHNOLOGIES AND IS NOT TO BE DISCLOSED OR REPRODUCED IN WHOLE OR PART, OR USED FOR MANUFACTURING FOR ANYONE OTHER THAN LIGHTPATH TECHNOLOGIES WITHOUT ITS WRITTEN CONSENT. NO RIGHT IS GRANTED TO DISCLOSE OR USE ANY INFORMATION CONTAINED IN SAID DOCUMENT.

TITLE: LENS CODE 354312

SIZE	DWG NO	REV
A2	0354312	B

SCALE:	THIRD ANGLE PROJECTION	SHEET
20.00		2 OF 2

REV B
SH 2
DWG NO 0354312