REVISION HISTORY				
REV	DCO	DESCRIPTION	DATE	INITIALS
A	1203	INITIAL RELEASE	08/28/07	JAL
B	2773	CONVERSION FROM SW TO PRO/E	05/06/11	INEWCOMB
C	4267	NEW CATALOG FORMAT	09/22/15	DS
D	4771	CHANGED WAVEFRONT ERROR FROM <0.100 TO <0.300	11/02/16	CL

NOTES: UNLESS OTHERWISE SPECIFIED

1. -OA1- IS THE THEORETICAL OPTIC AXIS OF THE FIRST OPTIC SURFACE.

2. -OA2- IS THE THEORETICAL OPTIC AXIS OF THE SECOND OPTIC SURFACE.

$$z(r) = \frac{r^2/R_c}{1+\sqrt{1-(1+K)(r/R_c)^2}} + \sum_i A_{2i} r^{2i}$$

WHERE r = RADIAL DISTANCE FROM VERTEX IN mm.

3. SURFACE DEFINITIONS:

	SURFACE 1	SURFACE 2
TYPE	ASPHERE	ASPHERE
SHAPE	CX	CX
CA	∅5.00	∅3.76
R_C	2.747974	-3.205609
K	-0.542698	-12.418010
A_2	0.000000E0	0.000000E0
A_4	-3.195461E-4	9.005307E-3
A_6	-4.397785E-5	-1.359752E-3
A_8	1.842256E-5	1.136638E-4
A_{10}	-1.566446E-6	-4.278925E-6
A_{12}	0.000000E0	0.000000E0
A_{14}	0.000000E0	0.000000E0
A_{16}	0.000000E0	0.000000E0

4. NOMINAL DESIGN PARAMETERS:

DESIGN WAVELENGTH	830 nm
W.D.	1.8 mm
N.A.	0.7
E.F.L.	3.1mm ± 1.0%

5. FEATURES IDENTIFIED AS ℄ ARE CRTICAL CHARACTERISTICS. CRITICAL CHARACTERISTICS ARE GUARANTEED IN PRODUCTION.

6. THIS ELEMENT MUST MEET THE SCRATCH/DIG REQUIREMENTS ACROSS THE FULL CLEAR APERTURES INDICATED, BOTH SIDES, PER LIGHTPATH PWI INS-8.2-05P6.℄ -00: S/D: 40/20.

7. THIS ELEMENT IS USED AS A COLLIMATING LENS. WAVEFRONT ERROR: < 0.300 WAVES RMS @ 633nm. PER LIGHTPATH PWI INS-8.2-03.℄

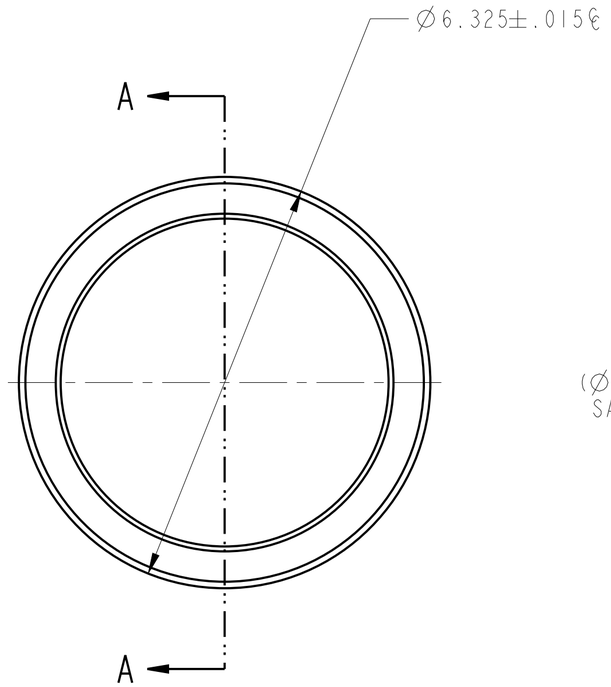

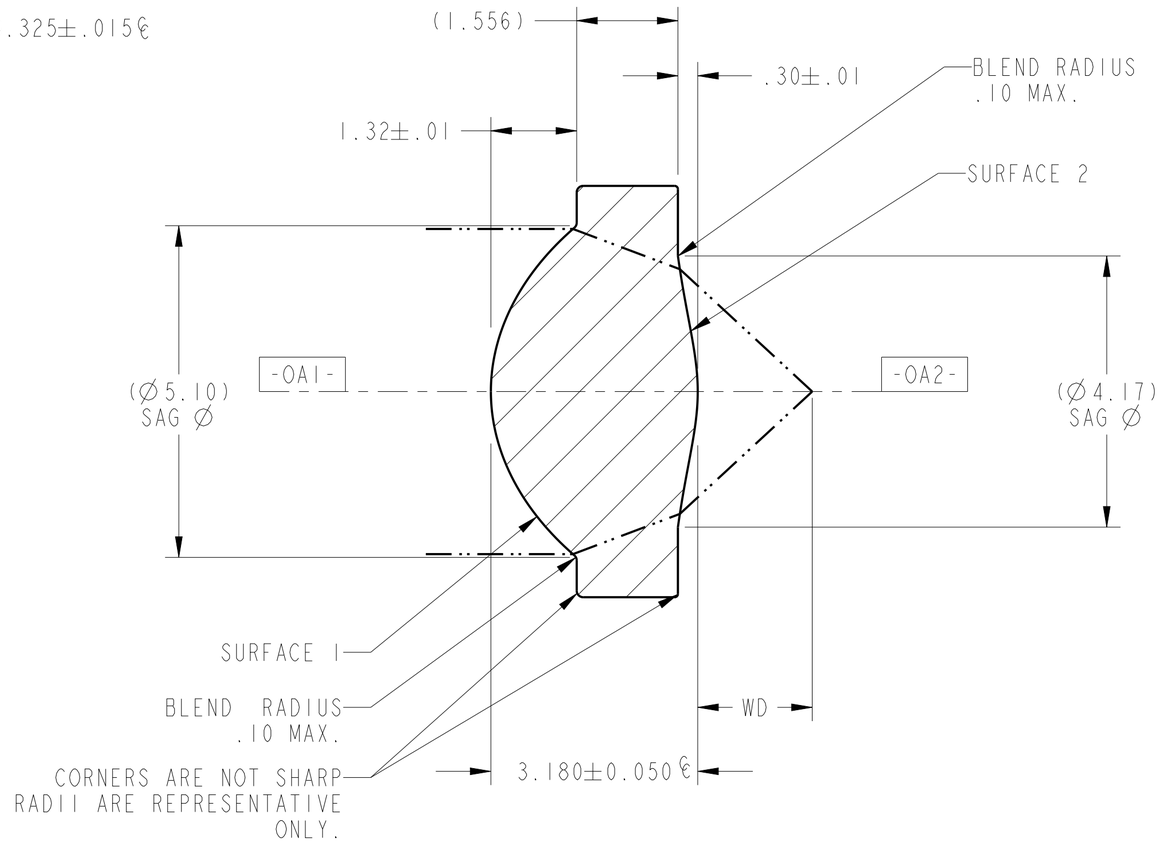

SECTION A-A

RoHS

UNLESS OTHERWISE SPECIFIED
DIMENSIONS ARE IN MM.
DECIMAL TOLERANCES ARE:
.X ± 0.25
.XX ± 0.10
.XXX ± 0.025
.XXXX ± 0.013
ANGLES: ± 0.5°

LightPath TECHNOLOGIES
2603 CHALLENGER TECH CT. SUITE 100
ORLANDO, FL 32826

PROPRIETARY INFORMATION
THIS DOCUMENT CONTAINS PROPRIETARY INFORMATION OF LIGHTPATH TECHNOLOGIES AND IS NOT TO BE DISCLOSED OR REPRODUCED IN WHOLE OR PART, OR USED FOR MANUFACTURING FOR ANYONE OTHER THAN LIGHTPATH TECHNOLOGIES WITHOUT ITS WRITTEN CONSENT. NO RIGHT IS GRANTED TO DISCLOSE OR USE ANY INFOMATION CONTAINED IN SAID DOCUMENT.

TITLE: LENS CODE 352330

DRAWN: INEWCOMB\ORL

MATERIAL: ECO550 (m)

SIZE: A2

DWG NO: 0352330

REV: D

SOFTWARE: Pro/ENGINEER

SCALE: 15.00

THIRD ANGLE PROJECTION

SHEET 1 OF 1

REV D

SH 1

DWG NO 0352330