REVISION HISTORY				
REV	DCO	DESCRIPTION	DATE	INITIALS
A	1204	INITIAL RELEASE	01/23/07	ABS
B	2648	CONVERSION FROM SW TO PRO/E	01/21/11	INEWCOMB
C	4330	UPDATE FORMAT	11/05/15	PL

NOTES: UNLESS OTHERWISE SPECIFIED

1. -OA1- IS THE THEORETICAL OPTIC AXIS OF THE FIRST OPTIC SURFACE.

2. ASPHERIC SURFACES ARE DEFINED BY:

$$z(r) = \frac{r^2/R_c}{1+\sqrt{1-(1+K)(r/R_c)^2}} + \sum_i A_{2i} r^{2i}$$

WHERE: Y= RADIAL DISTANCE FROM VERTEX IN mm

3. SURFACE DEFINITIONS:

	SURFACE 1	SURFACE 2
TYPE	ASPHERE	PLANO
SHAPE	CX	PL
CA	Ø5.50	Ø5.20
R_C	10.994800	PLANO
K	-0.706123	0.000000
A_2	0.000000E0	0.000000E0
A_4	1.081869E-5	0.000000E0
A_6	0.000000E0	0.000000E0
A_8	0.000000E0	0.000000E0
A_{10}	0.000000E0	0.000000E0
A_{12}	0.000000E0	0.000000E0
A_{14}	0.000000E0	0.000000E0
A_{16}	0.000000E0	0.000000E0

4. NOMINAL DESIGN PARAMETERS.

DESIGN WAVELENGTH	780 nm
W.D.	17.1 mm
N.A.	0.2
E.F.L.	18.4mm ± 1.0%

5. FEATURES IDENTIFIED AS ℄ ARE CRITICAL CHARACTERISTICS.
CRITICAL CHARACTERISTICS ARE GUARANTEED IN PRODUCTION.

6. THIS ELEMENT MUST MEET THE SCRATCH/DIG REQUIREMENTS ACROSS THE FULL CLEAR APERTURES INDICATED, BOTH SIDES, PER LIGHTPATH PWI INS-8.2-05P6.℄
-00: S/D: 40/20

7. THIS ELEMENT IS USED AS A COLLIMATING LENS.
WAVEFRONT ERROR: @ 100% APERTURE < 0.087 WAVES RMS @ 632.8nm;
@ 50% APERTURE < 0.270 WAVES P-V
PER LIGHTPATH PWI INS-8.2-03.℄

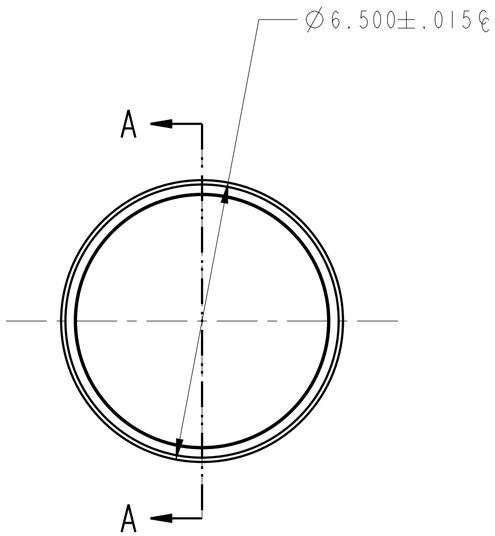

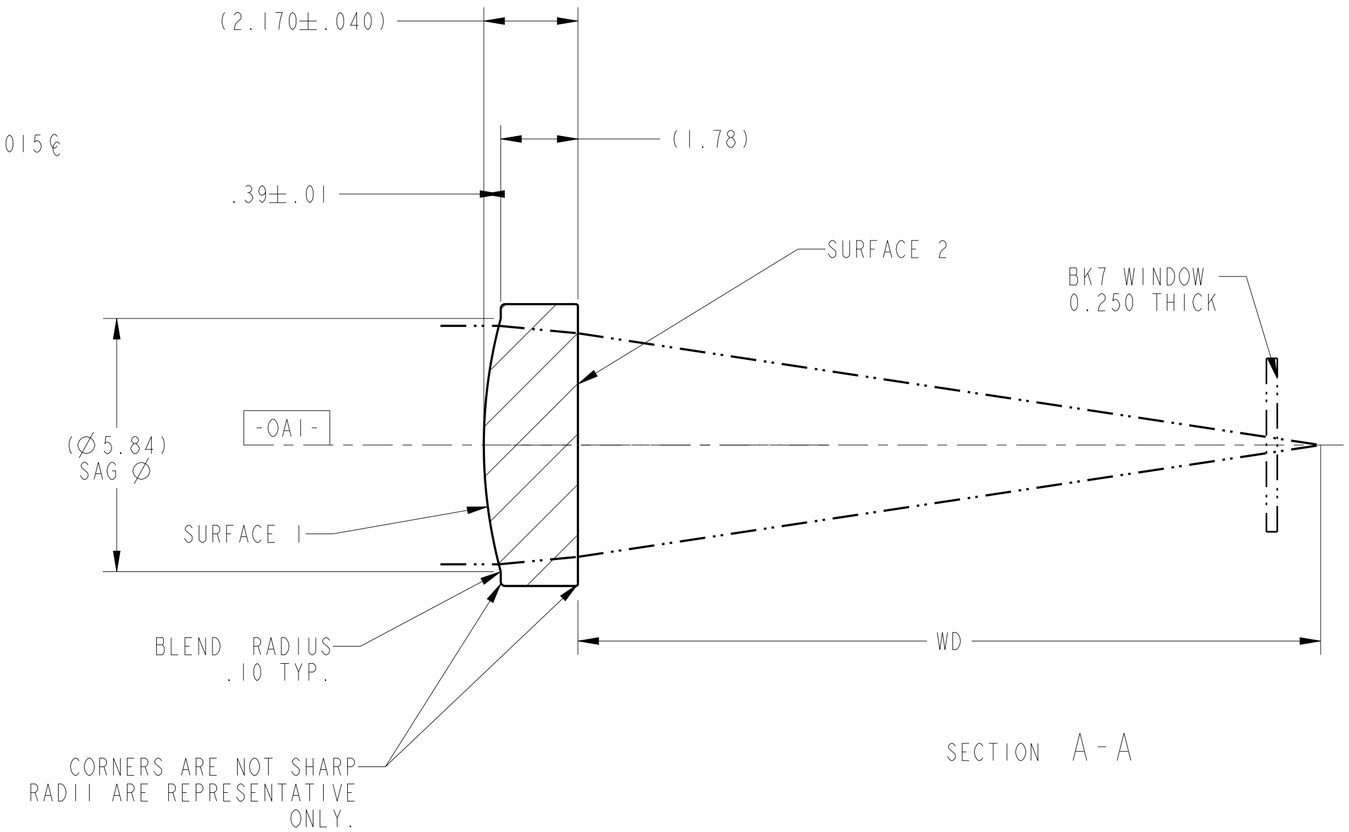

UNLESS OTHERWISE SPECIFIED
DIMENSIONS ARE IN MM.
DECIMAL TOLERANCES ARE:
.X ± 0.25
.XX ± 0.10
.XXX ± 0.025
.XXXX ± 0.013
ANGLES: ± 0.5°

DRAWN: INEWCOMB\ORL

LightPath TECHNOLOGIES
2603 CHALLENGER TECH CT. SUITE 100
ORLANDO, FL 32826

PROPRIETARY INFORMATION
THIS DOCUMENT CONTAINS PROPRIETARY INFORMATION OF LIGHTPATH TECHNOLOGIES AND IS NOT TO BE DISCLOSED OR REPRODUCED IN WHOLE OR PART, OR USED FOR MANUFACTURING FOR ANYONE OTHER THAN LIGHTPATH TECHNOLOGIES WITHOUT ITS WRITTEN CONSENT. NO RIGHT IS GRANTED TO DISCLOSE OR USE ANY INFOMATION CONTAINED IN SAID DOCUMENT.

TITLE: LENS CODE 352280

MATERIAL	SIZE	DWG NO	REV
ECO550(m)	A2	0352280	C

SOFTWARE	SCALE:	THIRD ANGLE PROJECTION	SHEET
Pro/ENGINEER	10.00		1 OF 1

REV C
SH 1
DWG NO 0352280