REVISION HISTORY				
REV	DCO	DESCRIPTION	DATE	INITIALS
A	993	INITIAL RELEASE	6/10/05	ABS
B	2565	UPGRADE TO PRO/E	11/23/10	BAUZ
C	4252	REFORMAT	08/31/15	DS

NOTES: UNLESS OTHERWISE SPECIFIED

1. -OA1- IS THE THEORETICAL OPTIC AXIS OF THE FIRST OPTIC SURFACE.

2. -OA2- IS THE THEORETICAL OPTIC AXIS OF THE SECOND OPTIC SURFACE.

3. ASPHERIC SURFACES ARE DEFINED BY:

$$z(r) = \frac{r^2/R_c}{1+\sqrt{1-(1+K)(r/R_c)^2}} + \sum_i A_{2i} r^{2i}$$

WHERE: r= RADIAL DISTANCE FROM VERTEX IN mm

4. SURFACE DEFINITIONS:

	SURFACE 1	SURFACE 2
TYPE	ASPHERE	SPHERE
SHAPE	CX	CX
CA	Ø4.95	Ø4.50
R_C	2.963268	-18.730603
K	-0.355236	0.000000
A_2	0.000000E0	0.000000E0
A_4	-1.328511E-3	0.000000E0
A_6	-1.397455E-4	0.000000E0
A_8	-3.768602E-6	0.000000E0
A_{10}	-1.012969E-6	0.000000E0
A_{12}	0.000000E0	0.000000E0
A_{14}	0.000000E0	0.000000E0
A_{16}	0.000000E0	0.000000E0

5. NOMINAL DESIGN PARAMETERS:

DESIGN WAVELENGTH	780 nm
W.D.	2.9 mm
N.A.	0.6
E.F.L.	4.5mm ± 1.0%

6. FEATURES IDENTIFIED AS ℄ ARE CRITICAL CHARACTERISTICS.
CRITICAL CHARACTERISTICS ARE GUARANTEED IN PRODUCTION.

7. THIS ELEMENT MUST MEET THE SCRATCH/DIG REQUIREMENTS ACROSS THE FULL CLEAR APERTURES INDICATED, BOTH SIDES, PER LIGHTPATH PWI INS-8.2-05P6. ℄
-00: S/D: 40/20.

8. THIS ELEMENT IS USED AS A COLLIMATING LENS.
WAVEFRONT ERROR: < 0.087 WAVES RMS @ 632.8nm.
PER LIGHTPATH PWI INS-8.2-03. ℄

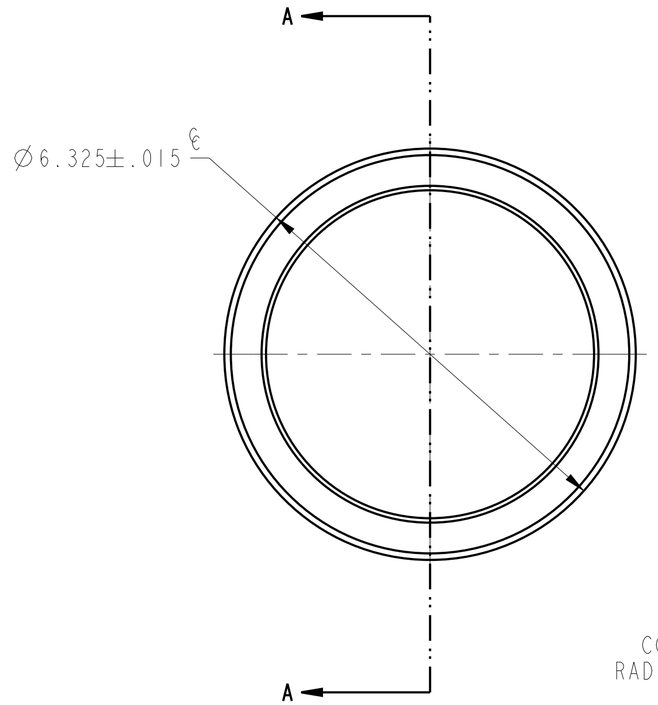

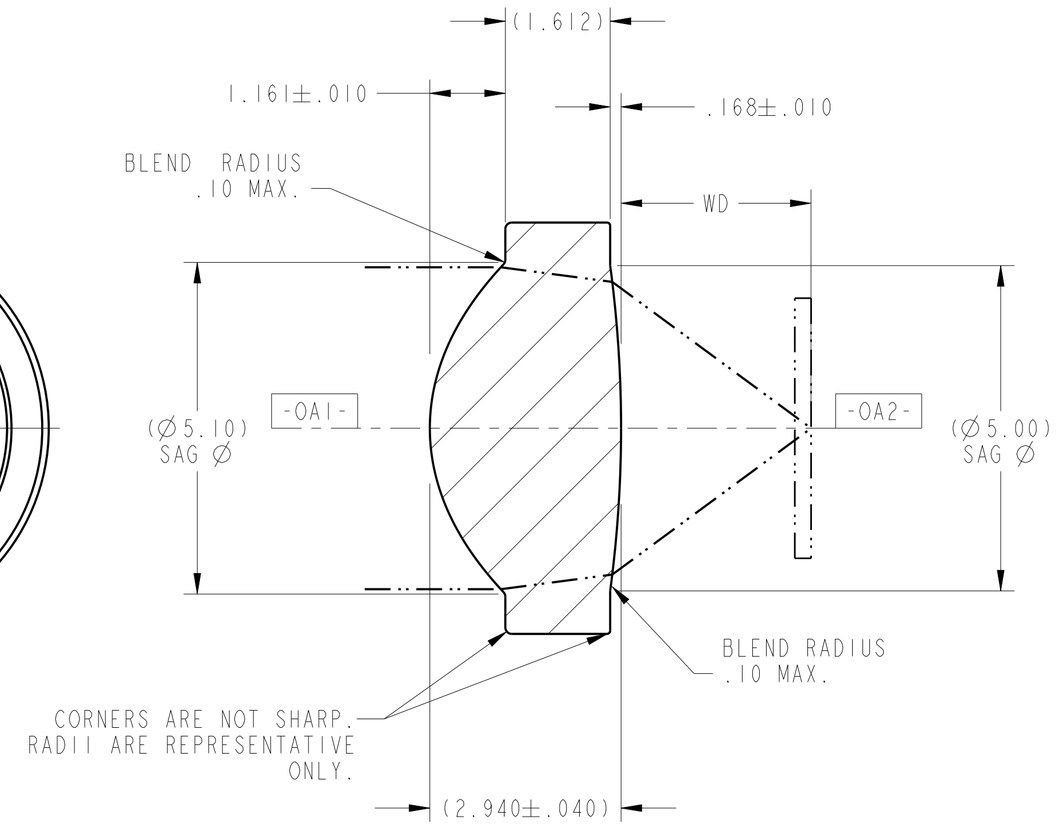

SECTION A-A

RoHS

UNLESS OTHERWISE SPECIFIED DIMENSIONS ARE IN MM. DECIMAL TOLERANCES ARE: .X ± 0.25 .XX ± 0.10 .XXX ± 0.025 .XXXX ± 0.013 ANGLES: ± 0.5°	LightPath TECHNOLOGIES 2603 CHALLENGER TECH CT. SUITE 100 ORLANDO, FL 32826	PROPRIETARY INFORMATION THIS DOCUMENT CONTAINS PROPRIETARY INFORMATION OF LIGHTPATH TECHNOLOGIES AND IS NOT TO BE DISCLOSED OR REPRODUCED IN WHOLE OR PART, OR USED FOR MANUFACTURING FOR ANYONE OTHER THAN LIGHTPATH TECHNOLOGIES WITHOUT ITS WRITTEN CONSENT. NO RIGHT IS GRANTED TO DISCLOSE OR USE ANY INFOMATION CONTAINED IN SAID DOCUMENT.	
DRAWN BAUZ\ORL	TITLE LENS CODE 352230		
MATERIAL ECO550(m)	SIZE A2	DWG NO 0352230	REV C
SOFTWARE Pro/ENGINEER	SCALE: 15.00	THIRD ANGLE PROJECTION	SHEET 1 OF 1

REV C
SH 1
DWG NO 0352230