REVISION HISTORY				
REV	DCO	DESCRIPTION	DATE	INITIALS
A	1605	INITIAL RELEASE	12/5/07	JAL
B	2604	CONVERSION FROM SW TO PRO/E	12/15/10	INEWCOMB
C	4252	REFORMAT	08/31/15	DS

NOTES: UNLESS OTHERWISE SPECIFIED

1. -OA1- IS THE THEORETICAL OPTIC AXIS OF THE FIRST OPTIC SURFACE.
2. -OA2- IS THE THEORETICAL OPTIC AXIS OF THE SECOND OPTIC SURFACE.
3. ASPHERIC SURFACES ARE DEFINED BY:

$$z(r) = \frac{r^2/R_c}{1+\sqrt{1-(1+K)(r/R_c)^2}} + \sum_i A_{2i} r^{2i}$$

WHERE: r = RADIAL DISTANCE FROM VERTEX IN mm

4. SURFACE DEFINITIONS:

	SURFACE 1	SURFACE 2
TYPE	ASPHERE	ASPHERE
SHAPE	CX	CX
CA	∅2.00	∅1.50
R_C	1.504317	-2.922650
K	-0.864854	-15.023640
A_2	0.000000E0	0.000000E0
A_4	7.017526E-3	0.000000E0
A_6	-1.032304E-3	0.000000E0
A_8	-6.033910E-4	0.000000E0
A_{10}	0.000000E0	0.000000E0
A_{12}	0.000000E0	0.000000E0
A_{14}	0.000000E0	0.000000E0
A_{16}	0.000000E0	0.000000E0

5. NOMINAL DESIGN PARAMETERS:

DESIGN WAVELENGTH	780 nm
W.D.	1.1 mm
N.A.	0.5
E.F.L.	2.0mm ± 1.0%

6. FEATURES IDENTIFIED AS ℄ ARE CRITICAL CHARACTERISTICS.
CRITICAL CHARACTERISTICS ARE GUARANTEED IN PRODUCTION.

7. THIS ELEMENT MUST MEET THE SCRATCH/DIG REQUIREMENTS ACROSS THE FULL CLEAR APERTURES INDICATED, BOTH SIDES, PER LIGHTPATH PWI INS-8.2-05P6. ℄
-00: S/D: 40/20.

8. THIS ELEMENT IS USED AS A COLLIMATING LENS.
WAVEFRONT ERROR: < 0.087 WAVES RMS @ 632.8nm.
PER LIGHTPATH PWI INS-8.2-13. ℄

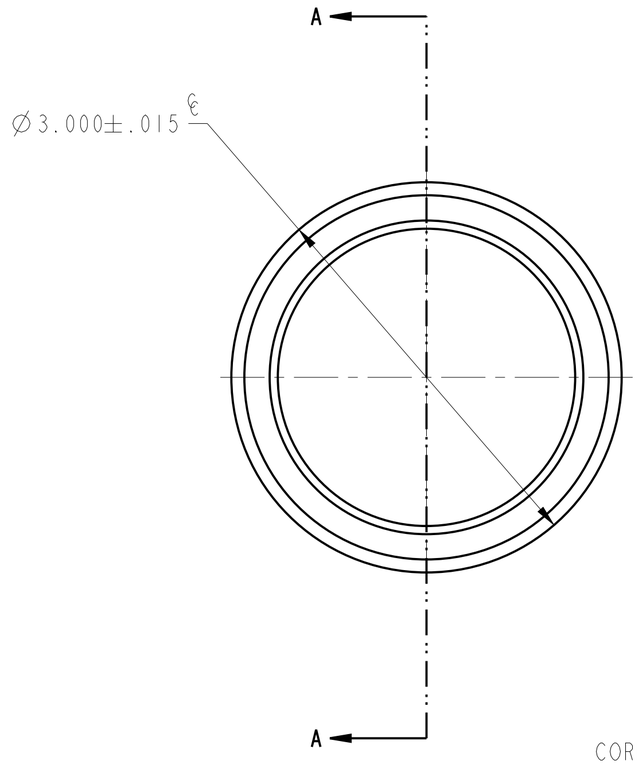

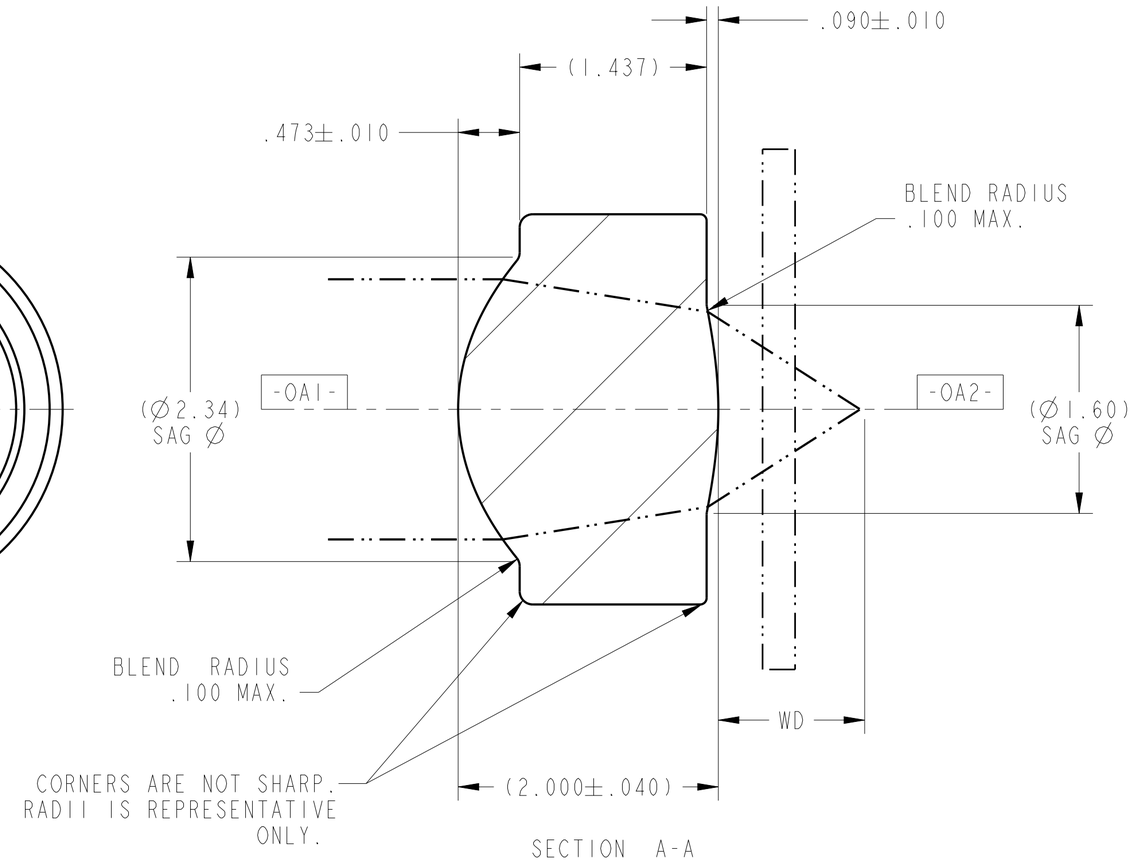

RoHS

UNLESS OTHERWISE SPECIFIED
DIMENSIONS ARE IN MM.
DECIMAL TOLERANCES ARE:
.X ± 0.25
.XX ± 0.10
.XXX ± 0.025
.XXXX ± 0.013
ANGLES: ± 0.5°

LightPath TECHNOLOGIES
2603 CHALLENGER TECH CT. SUITE 100
ORLANDO, FL 32826

PROPRIETARY INFORMATION
THIS DOCUMENT CONTAINS PROPRIETARY INFORMATION OF LIGHTPATH TECHNOLOGIES AND IS NOT TO BE DISCLOSED OR REPRODUCED IN WHOLE OR PART, OR USED FOR MANUFACTURING FOR ANYONE OTHER THAN LIGHTPATH TECHNOLOGIES WITHOUT ITS WRITTEN CONSENT. NO RIGHT IS GRANTED TO DISCLOSE OR USE ANY INFOMATION CONTAINED IN SAID DOCUMENT.

TITLE: LENS CODE 352150

DRAWN: INEWCOMB\ORL

MATERIAL: ECO550(m)

SIZE: A2

DWG NO: 0352150

REV: C

SOFTWARE: Pro/ENGINEER

SCALE: 30.00

THIRD ANGLE PROJECTION

SHEET 1 OF 1

REV C
SH 1
DWG NO 0352150