ARK

薄型气缸
Compact Air Cylinder
Series KCQ2 (Ø12~Ø100)

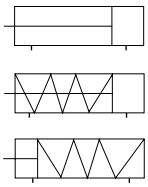

规格 Specifications

缸径 Bore size (mm)	12	16	20	25	32	40	50	63	80	100
接管口径 Port size Rc(PT)	M5x0.8				1/8		1/4		3/8	
使用流体 Fluid	过滤洁净空气 Filtered clean air									
动作形式 Action	双动 / 单动 Double acting/ Single acting									
保证耐压力 Proof pressure (MPa)	1.5									
使用压力范围 Operating pressure range (MPa)	0.05~1.0									
环境及流体温度 Ambient and fluid temperature	-5~60℃ (未冻结 No freezing)									
活塞速度 Piston speed	50~500 mm/s									
缓冲 Cushion	橡胶缓冲 Rubber bumper									
行程公差 Stroke tolerance (mm)	$^{+1.0}_{0}$									
* 润滑 Lubrication	不需要 Not required									

* 如需要润滑请使用透平 1 号油 ISOVG32。Please use Turbine oil 1st Grade ISOVG32 if necessary.

行程 / 磁性开关 Stroke/ Auto switch

缸径 Bore size (mm)	标准行程 Standard stroke (mm)	* 中间行程范围 Middle stroke range (mm)	磁性开关 / 轨道安装 Auto switch/ Rail mounting
12, 16	5, 10, 15, 20, 25, 30	1~29	D-Z80K
20, 25	5, 10, 15, 20, 25, 30, 35, 40, 45, 50	1~49	
32, 40	5, 10, 15, 20, 25, 30, 35, 40, 45, 50, 75, 100	1~99	
50, 63, 80, 100	10, 15, 20, 25, 30, 35, 40, 45, 50, 75, 100		

* 中间行程的最小间隔为 1mm, 通过在比中间行程长的标准行程缸筒内安装隔板的方式实现。
Middle stroke interval minimum 1 mm is implemented by using spacer in barrel of standard stroke.

型号表示方法 How to Order

KC [D] Q2 [W] [A] [32] - [30] [D] [M] - [Z80K] [S]

磁环 Magnet

-	无 None
D	内置磁环 Built-in magnet

活塞杆形式 Rod type

-	单活塞杆 Single rod
W	双活塞杆 Double rod

安装形式 Mounting

A	基本型 (两端沉孔和内螺纹以及通孔) Basic (Both ends tapped with female thread and through-holes)
L	脚座 Foot
F	前法兰 Front flange
G	后法兰 Rear flange
D	双 U 型钩 Double clevis

缸径 Bore size (mm)

行程 Stroke (mm)

动作形式 Action

D	双动 Double acting
*S	单动 (弹簧压回) Single acting (Spring return)
*T	单动 (弹簧压出) Single acting (Spring extend)

杆端螺纹 Rod end thread

-	杆端内螺纹 Rod end female thread
M	杆端外螺纹 Rod end male thread

磁性开关 Auto switch

Z80K	D-Z80K	有接点型 Reed switch
Z80KD	D-Z80KD	两线式无接点 2-wire, solid state
Z80KN	D-Z80KN	NPN 无接点 NPN solid state output
Z80KP	D-Z80KP	PNP 无接点 PNP solid state output

磁性开关数量 No. of auto switches

-	2
S	1
3	3

3

薄型气缸
Compact Air Cylinder
Series KCQ2

外形尺寸图 Dimensions (mm)

KC(D)Q2A

Ø12~Ø25

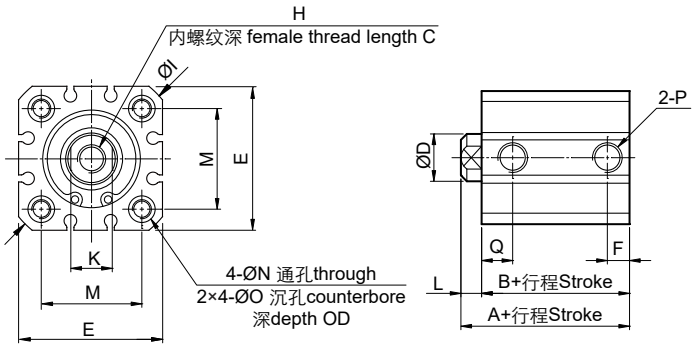

杆端外螺纹
Rod end male thread

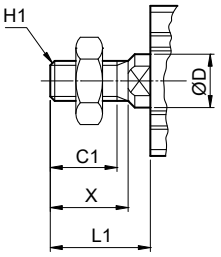

Ø32~Ø100

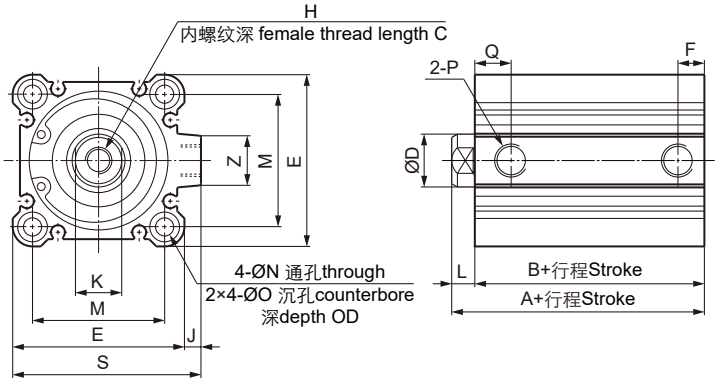

4-通孔和两端沉孔加内螺纹
4-though hole and both ends
tapper with female thread

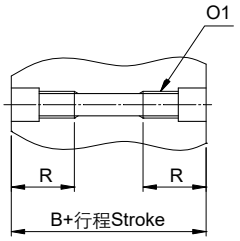

缸径 Bore size	行程范围 Stroke range	KCQ2A		KCDQ2A		C	C1	D	E	F	H	H1	I	J	K	L	L1	M	N	O	O1	OD	P	Q	R	S	X	Z
		A	B	A	B																							
12	5~30	20.5	17	31.5	28	6	9	6	25	4.5	M3x0.5	M5x0.8	32	-	5	3.5	14	15.5	3.5	6.5	M4x0.7	3.5	M5x0.8	7.5	9.5	-	10.5	-
16	5~30	22	18.5	34	30.5	8	10	8	29	5	M4x0.7	M6x1.0	38	-	6	3.5	15.5	20	3.5	6.5	M4x0.7	3.5	M5x0.8	9.5	9.5	-	12	-
20	5~50	24	19.5	36	31.5	7	12	10	36	5.5	M5x0.8	M8x1.25	47	-	8	4.5	18.5	25.5	5.5	9	M6x1.0	7	M5x0.8	9.5	17	-	14	-
25	5~50	27.5	22.5	37.5	32.5	12	15.5	12	40	5.5	M6x1.0	M10x1.25	52	-	10	5	22.5	28	5.5	9	M6x1.0	7	M5x0.8	11	17	-	17.5	-
32	5	30	23	40	33	13	20.5	16	45	5.5	M8x1.25	M14x1.5	-	4.5	14	7	28.5	34	5.5	9	M6x1.0	7	*1/8	11.5	17	49.5	23.5	13
	10~50									7.5														10.5				
	75, 100	40	33																									
40	5~50	36.5	29.5	46.5	39.5	13	20.5	16	52	8.5	M8x1.25	M14x1.5	-	5	14	7	28.5	40	5.5	9	M6x1.0	7	1/8	12	17	57	23.5	14
	75, 100	46.5	39.5																									
50	10~50	38.5	30.5	48.5	40.5	15	26	20	64	10.5	M10x1.5	M18x1.5	-	7	18	8	33.5	50	6.5	11	M8x1.25	8	1/4	11.5	22	71	28.5	16
	75, 100	48.5	40.5																									
63	10~50	44	36	54	46	15	26	20	77	10	M10x1.5	M18x1.5	-	7	18	8	33.5	60	9	14	M10x1.5	10.5	1/4	15.5	28.5	84	28.5	19
	75, 100	54	46																									
80	10~50	53.5	43.5	63.5	53.5	21	32.5	25	98	14	M16x2.0	M22x1.5	-	6	22	10	43.5	77	11	17.5	M12x1.75	13.5	3/8	16	35.5	104	35.5	22
	75, 100	63.5	53.5																									
100	10~50	65	53	75	63	27	32.5	30	117	17.5	M20x2.5	M26x1.5	-	6.5	27	12	43.5	94	11	17.5	M12x1.75	13.5	3/8	20	35.5	123.5	35.5	26
	75, 100	75	63																									

* 型号 KCQ2A32-5 (无磁环，缸径 32mm，行程 5mm) 的接管口径为 M5x0.8。
Port size of KCQ2A32-5 (32 mm bore size and 5 mm stroke length without magnet) is M5x0.8.

薄型气缸
Compact Air Cylinder
Series KCQ2

外形尺寸图 Dimensions (mm)

KC(D)Q2WA

Ø12~Ø25

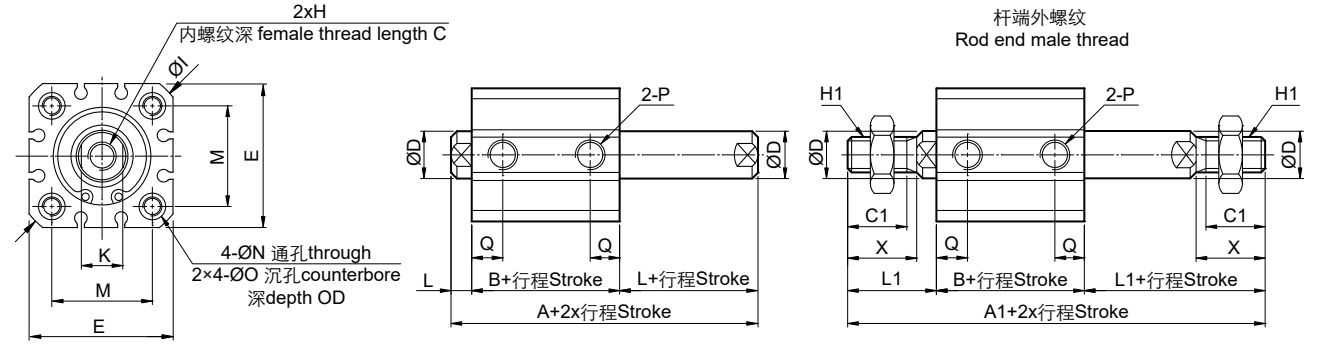

Ø32~Ø100

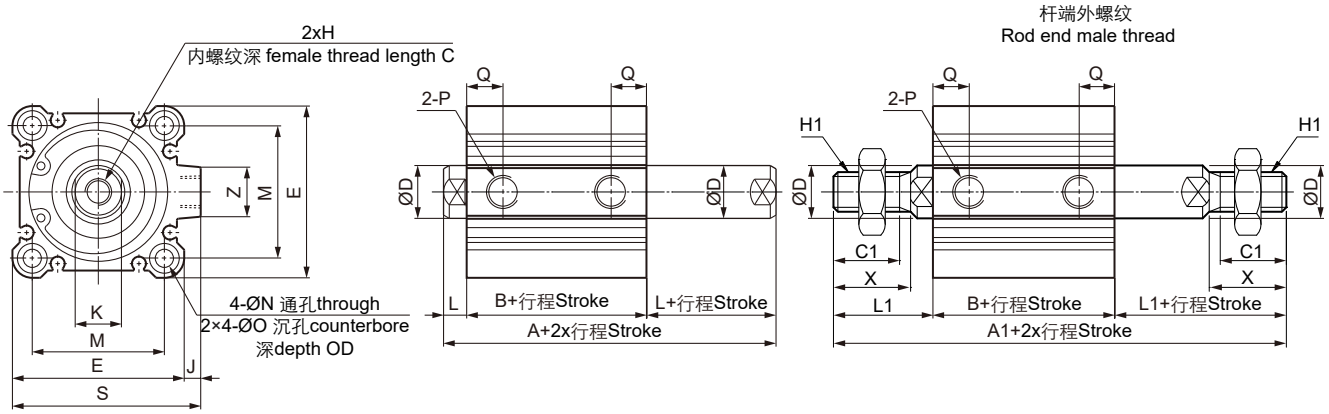

缸径 Bore size	行程范围 Stroke range	KCQ2WA			KCDQ2WA			C	C1	D	E	H	H1	I	J	K	L	L1	M	N	O	OD	P	Q	S	X	Z
		A	A1	B	A	A1	B																				
12	5~30	24	45	17	35	56	28	6	9	6	25	M3x0.5	M5x0.8	32	-	5	3.5	14	15.5	3.5	6.5	3.5	M5x0.8	7.5	-	10.5	-
16	5~30	25.5	49.5	18.5	37.5	61.5	30.5	8	10	8	29	M4x0.7	M6x1.0	38	-	6	3.5	15.5	20	3.5	6.5	3.5	M5x0.8	9.5	-	12	-
20	5~50	28.5	56.5	19.5	40.5	68.5	31.5	7	12	10	36	M5x0.8	M8x1.25	47	-	8	4.5	18.5	25.5	5.5	9	7	M5x0.8	9.5	-	14	-
25	5~50	32.5	67.5	22.5	42.5	77.5	32.5	12	15.5	12	40	M6x1.0	M10x1.25	52	-	10	5	22.5	28	5.5	7	7	M5x0.8	11	-	17.5	-
32	5	37	80	23	47	90	33	13	20.5	16	45	M8x1.25	M14x1.5	-	4.5	14	7	28.5	34	5.5	9	7	*1) 1/8	11.5	49.5	23.5	13
	10~50																							37			
	75, 100	47	90	33																							
40	5~50	43.5	86.5	29.5	53.5	96.5	39.5	13	20.5	16	52	M8x1.25	M14x1.5	-	5	14	7	28.5	40	5.5	9	7	1/8	12	57	23.5	14
	75, 100	53.5	96.5	39.5																							
50	10~50	46.5	97.5	30.5	56.5	107.5	40.5	15	26	20	64	M10x1.5	M18x1.5	-	7	18	8	33.5	50	6.5	11	8	1/4	11.5	71	28.5	16
	75, 100	56.5	107.5	40.5																							
63	10~50	52	103	36	62	113	46	15	26	20	77	M10x1.5	M18x1.5	-	7	18	8	33.5	60	9	14	10.5	1/4	15.5	84	28.5	19
	75, 100	62	113	46																							
80	10~50	63.5	130.5	43.5	73.5	140.5	53.5	21	32.5	25	98	M16x2	M22x1.5	-	6	22	10	43.5	77	11	17.5	1.5	3/8	16	104	35.5	22
	75, 100	73.5	140.5	53.5																							
100	10~50	77	140	53	87	150	63	27	32.5	30	117	M20x2.5	M26x1.5	-	6.5	27	12	43.5	94	11	17.5	13.5	3/8	20	123.5	35.5	26
	75, 100	87	150	63																							

* 1) 型号 KCQ2A32-5 (无磁环，缸径 32mm，行程 5mm) 的接管口径为 M5x0.8。
Port size of KCQ2A32-5 (32 mm bore size and 5 mm stroke length without magnet) is M5x0.8.
2) 未标注尺寸与单活塞杆基本型相同。The unmentioned dimensions are same as the single rod basic type.

薄型气缸
Compact Air Cylinder
Series KCQ2

外形尺寸图 Dimensions (mm)

KC(D)Q2L

Ø12~Ø25

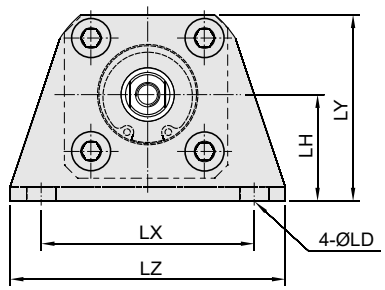

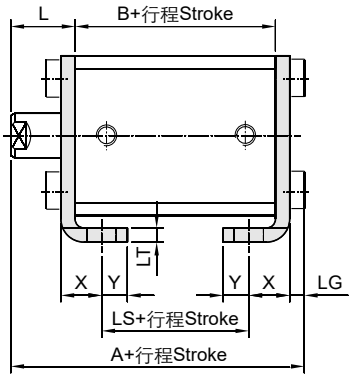

杆端外螺纹
Rod end male thread

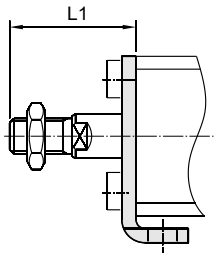

Ø32~Ø100

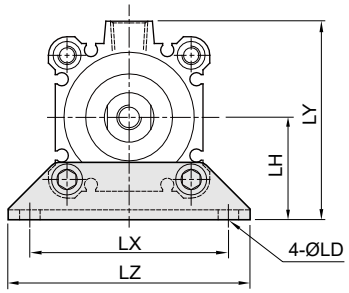

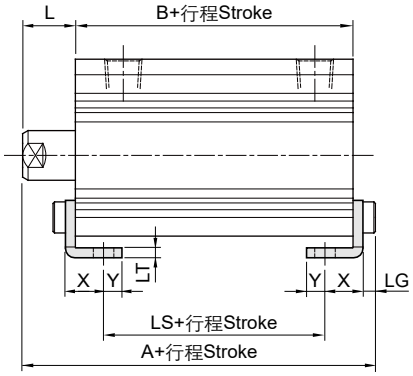

杆端外螺纹
Rod end male thread

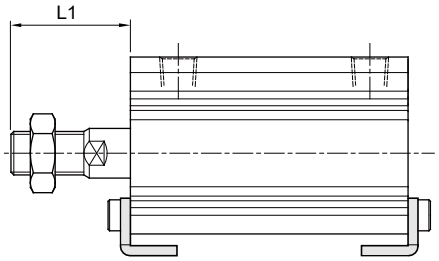

零件号 Part No.	缸径 Bore size	行程范围 Stroke range	KCQ2L			KCDQ2L			L	L1	LD	LG	LH	LT	LX	LY	LZ	X	Y
			A	B	LS	A	B	LS											
FCQ-L012	12	5~30	35.3	17	5	46.3	28	16	13.5	24	4.5	2.8	17	2	34	29.5	44	8	4.5
FCQ-L016	16	5~30	36.8	18.5	6.5	48.8	30.5	18.5	13.5	25.5	4.5	2.8	19	2	38	33.5	48	8	5
FCQ-L020	20	5~50	41.2	19.5	7.1	53.2	31.5	19.1	14.5	28.5	6.5	4	24	3	48	42	62	9.2	5.8
FCQ-L025	25	5~50	44.7	22.5	7.1	54.7	32.5	17.1	15	32.5	6.5	4	26	3	52	46	66	10.7	5.8
FCQ-L032	32	5~50	47	23	6.6	57	33	16.6	17	38.5	6.6	4	30	3	57	57	71	11.2	5.8
		75, 100	57	33	16.6														
FCQ-L040	40	5~50	53.5	29.5	13.1	63.5	39.5	23.1	17	38.5	6.6	4	33	3	64	64	78	11.2	7
		75, 100	63.5	39.5	23.1														
FCQ-L050	50	10~50	56.5	30.5	12.1	66.5	40.5	22.1	18	43.5	9	5	39	3	79	78	95	12.2	8
		75, 100	66.5	40.5	22.1														
FCQ-L063	63	10~50	62	36	14.6	72	46	24.6	18	43.5	11	5	46	3	95	91.5	113	13.7	9
		75, 100	72	46	24.6														
FCQ-L080	80	10~50	75	43.5	18.5	85	53.5	28.5	20	53.5	13	7	59	4.5	118	114	140	16.5	11
		75, 100	85	53.5	28.5														
FCQ-L100	100	10~50	88	53	19	98	63	29	22	53.5	13	7	71	6	137	136	162	23	12.5
		75, 100	98	63	29														

* 标注尺寸与基本型相同。The unmentioned dimensions are same as the Basic type.

薄型气缸
Compact Air Cylinder
Series KCQ2

外形尺寸图 Dimensions (mm)

KC(D)Q2F

Ø12~Ø25

杆端外螺纹
Rod end male thread

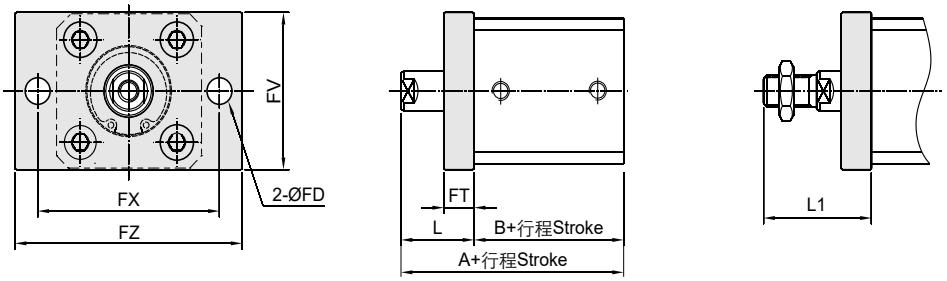

Ø32~Ø100

杆端外螺纹
Rod end male thread

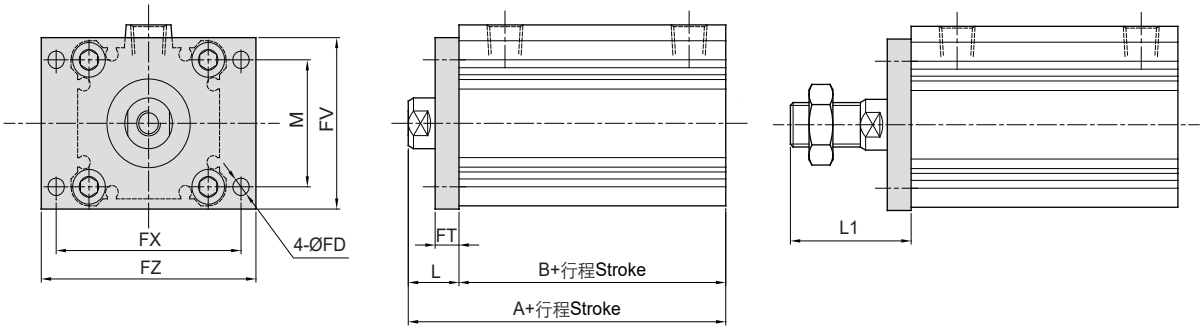

零件号 Part No.	缸径 Bore size	行程范围 Stroke range	KCQ2F		KCDQ2F		FD	FT	FV	FX	FZ	L	L1	M
			A	B	A	B								
FCQ-F012	12	5~30	30.5	17	41.5	28	4.5	5.5	25	45	55	13.5	24	-
FCQ-F016	16	5~30	32	18.5	44	30.5	4.5	5.5	30	45	55	13.5	25.5	-
FCQ-F020	20	5~50	34	19.5	46	31.5	6.5	8	39	48	60	14.5	28.5	-
FCQ-F025	25	5~50	37.5	22.5	47.5	32.5	6.5	8	42	52	64	15	32.5	-
FCQ-F032	32	5~50	40	23	50	33	5.5	8	48	56	65	17	38.5	34
		75, 100	50	33										
FCQ-F040	40	5~50	46.5	29.5	56.5	39.5	5.5	8	54	62	72	17	38.5	40
		75, 100	56.5	39.5										
FCQ-F050	50	10~50	48.5	30.5	58.5	40.5	6.5	9	67	76	89	18	43.5	50
		75, 100	58.5	40.5										
FCQ-F063	63	10~50	54	36	64	46	9	9	80	92	108	18	43.5	60
		75, 100	64	46										
FCQ-F080	80	10~50	63.5	43.5	73.5	53.5	11	11	99	116	134	20	53.5	77
		75, 100	73.5	53.5										
FCQ-F100	100	10~50	75	53	85	63	11	11	117	136	154	22	53.5	94
		75, 100	85	63										

* 标注尺寸与基本型相同。The unmentioned dimensions are same as the Basic type.

杆端螺母 Rod end nut

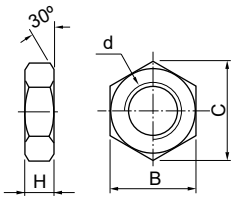

零件号 Part No.	缸径 Bore size	B	C	d	H
FNT-015A	12	8	9.2	M5x0.8	4
FNTJ-015A	16	10	11.5	M6x1.0	5
FNT-02	20	13	15	M8x1.25	5
FNT-03	25	17	19.6	M10x1.25	6
FNT-04	32, 40	22	25.4	M14x1.5	8
FNT-05	50, 63	27	31.2	M18x1.5	11
FNT-08	80	32	37	M22x1.5	13
FNT-10	100	41	47.3	M26x1.5	16

薄型气缸
Compact Air Cylinder
Series KCQ2

外形尺寸图 Dimensions (mm)

KC(D)Q2G

Ø12~Ø25

杆端外螺纹
Rod end male thread

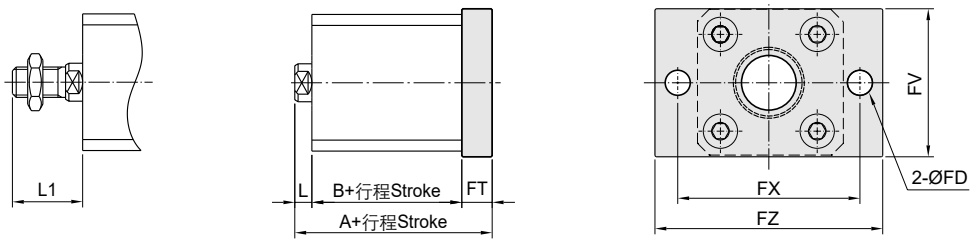

Ø32~Ø100

杆端外螺纹
Rod end male thread

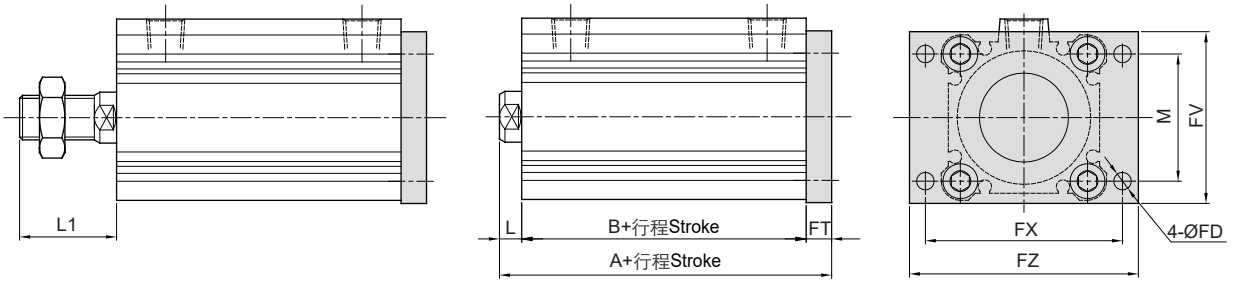

零件号 Part No.	缸径 Bore size	行程范围 Stroke range	KCQ2G		KCDQ2G		FD	FT	FV	FX	FZ	L	L1	M
			A	B	A	B								
FCQ-F012	12	5~30	26	17	37	28	4.5	5.5	25	45	55	3.5	14	-
FCQ-F016	16	5~30	27.5	18.5	39.5	30.5	4.5	5.5	30	45	55	3.5	15.5	-
FCQ-F020	20	5~50	32	19.5	44	31.5	6.5	8	39	48	60	4.5	18.5	-
FCQ-F025	25	5~50	35.5	22.5	45.5	32.5	6.5	8	42	52	64	5	22.5	-
FCQ-F032	32	5~50	38	23	48	33	5.5	8	48	56	65	7	28.5	34
		75, 100	48	33										
FCQ-F040	40	5~50	44.5	29.5	54.5	39.5	5.5	8	54	62	72	7	28.5	40
		75, 100	54.5	39.5										
FCQ-F050	50	10~50	47.5	30.5	57.5	40.5	6.5	9	67	76	89	8	33.5	50
		75, 100	57.5	40.5										
FCQ-F063	63	10~50	53	36	63	46	9	9	80	92	108	8	33.5	60
		75, 100	63	46										
FCQ-F080	80	10~50	64.5	43.5	74.5	53.5	11	11	99	116	134	10	43.5	77
		75, 100	74.5	53.5										
FCQ-F100	100	10~50	76	53	86	63	11	11	117	136	154	12	43.5	94
		75, 100	86	63										

* 标注尺寸与基本型相同。
The unmentioned dimensions are same as the Basic type.

销子Pin

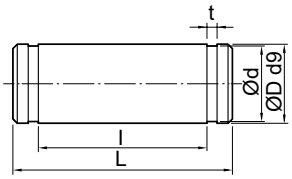

适用双U型钩 Applicable for double trunnion

零件号 Part No.	缸径 Bore size	d	D	l	L	t	扣环 Snap ring
FIY-G012	12	$4.8^{0}_{-0.04}$	$5^{-0.03}_{-0.06}$	10.2	14.6	$0.7^{+0.1}_{0}$	STW-5
FIY-G015	16	$4.8^{0}_{-0.04}$	$5^{-0.03}_{-0.06}$	12.2	16.6	$0.7^{+0.1}_{0}$	STW-5
FIY-G02	20	$7.6^{0}_{-0.06}$	$8^{-0.04}_{-0.08}$	16.2	21	$0.9^{+0.1}_{0}$	STW-8
FIY-G03	25	$9.6^{0}_{-0.06}$	$10^{-0.04}_{-0.08}$	20.2	25.6	$1.15^{+0.14}_{0}$	STW-10
FIY-G04	32, 40	$9.6^{0}_{-0.06}$	$10^{-0.04}_{-0.08}$	36.2	41.6	$1.15^{+0.14}_{0}$	STW-10
FIY-G06	50, 63	$13.4^{-0.05}_{-0.10}$	$14^{-0.05}_{-0.10}$	44.2	50.6	$1.15^{+0.14}_{0}$	STW-14
FIY-G08	80	$17^{-0.05}_{-0.10}$	$18^{-0.05}_{-0.10}$	56.2	64	$1.35^{+0.14}_{0}$	STW-18
FIY-G10	100	$21^{-0.07}_{-0.12}$	$22^{-0.07}_{-0.12}$	64.2	72	$1.35^{+0.14}_{0}$	STW-22

薄型气缸
Compact Air Cylinder
Series KCQ2

外形尺寸图 Dimensions (mm)

KC(D)Q2D

Ø12~Ø25

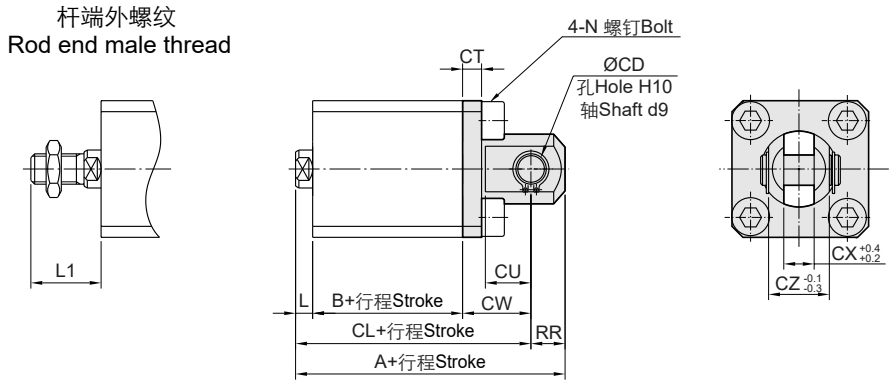

Ø32~Ø100

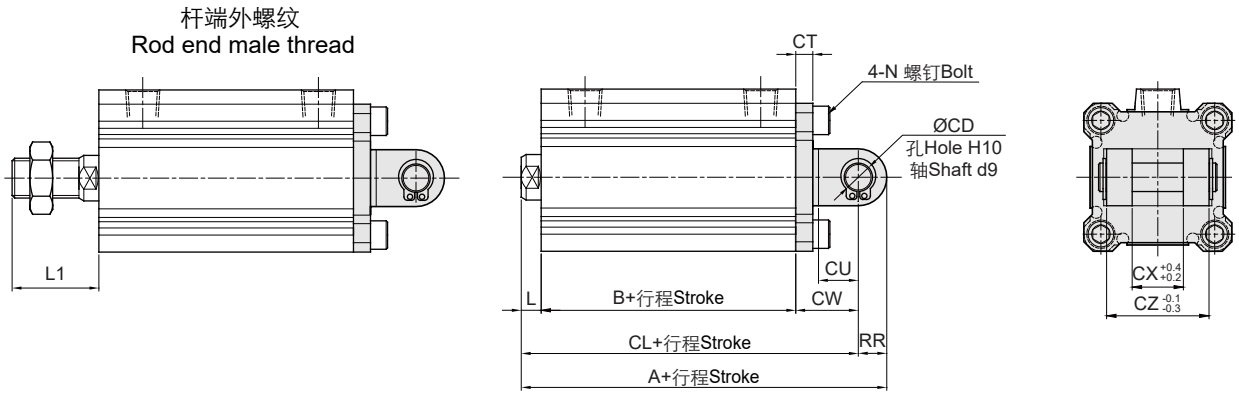

零件号 Part No.	缸径 Bore size	行程范围 Stroke range	KCQ2D			KCDQ2D			CD	CT	CU	CW	CX	CZ	L	L1	N	RR
			A	B	CL	A	B	CL										
FCQ-D012	12	5~30	40.5	17	34.5	51.5	28	45.5	5	4	7	14	5	10	3.5	14	M4x0.7	6
FCQ-D016	16	5~30	43	18.5	37	55	30.5	49	5	4	10	15	6.5	12	3.5	15.5	M4x0.7	6
FCQ-D020	20	5~50	51	19.5	42	63	31.5	54	8	5	12	18	8	16	4.5	18.5	M6x1.0	9
FCQ-D025	25	5~50	57.5	22.5	47.5	67.5	32.5	57.5	10	5	14	20	10	20	5	22.5	M6x1.0	10
FCQ-D032	32	5~50	60	23	50	70	33	60	10	5	14	20	18	36	7	28.5	M6x1.0	10
		75, 100	70	33	60													
FCQ-D040	40	5~50	68.5	29.5	58.5	78.5	39.5	68.5	10	6	14	22	18	36	7	28.5	M6x1.0	10
		75, 100	78.5	39.5	68.5													
FCQ-D050	50	10~50	80.5	30.5	66.5	90.5	40.5	76.5	14	7	20	28	22	44	8	33.5	M8x1.25	14
		75, 100	90.5	40.5	76.5													
FCQ-D063	63	10~50	88	36	74	98	46	84	14	8	20	30	22	44	8	33.5	M10x1.5	14
		75, 100	98	46	84													
FCQ-D080	80	10~50	109.5	43.5	91.5	119.5	53.5	101.5	18	10	27	38	28	56	10	43.5	M12x1.75	18
		75, 100	119.5	53.5	101.5													
FCQ-D100	100	10~50	132	53	110	142	63	120	22	13	31	45	32	64	12	43.5	M12x1.75	22
		75, 100	142	63	120													

* 标注尺寸与基本型相同。The unmentioned dimensions are same as the Basic type.