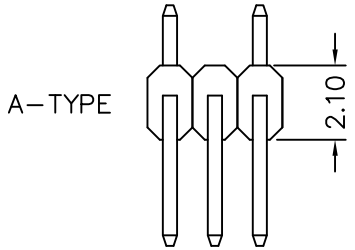

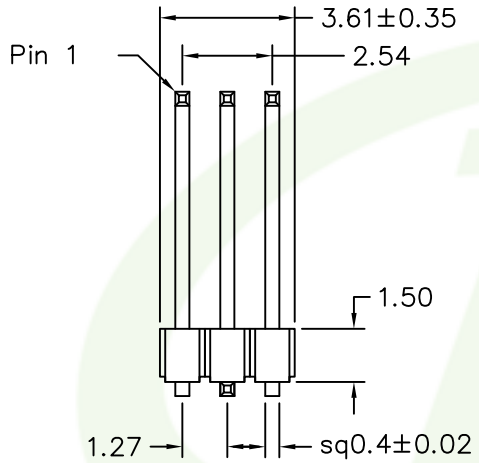

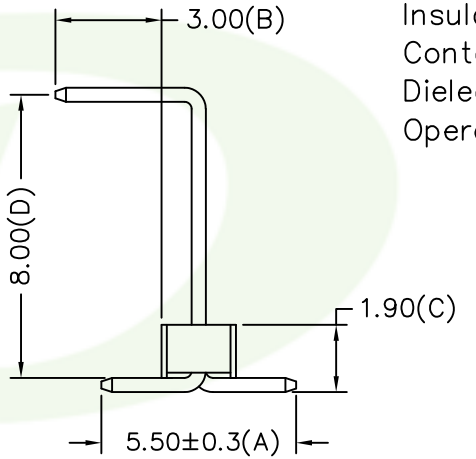

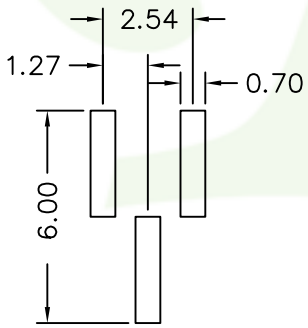

A-TYPE

Recommended P.C.B Layout

MATERIAL

Insulator: Thermoplastic High Temp Halogen free UL94-V0

Contact Pin : Brass

SPECIFICATION

Current Rate : 1 AMP

Insulation Resistance : 5000MΩMin. at DC 500V

Contact Resistance : 20mΩMax. at DC 100mA

Dielectric Voltage : AC 500V for one minute

Operating Temperature: -40°C to +105°C

23F-Hx 6- xx x x xx

1 2 3 4 5 6

1. H9: Halogen free
   Green Product High Temp
2. 2: Dual rows
   Plastic Height=1.0mm
   6: Dual rows
   Plastic Height=1.5mm
3. No. of contacts per row
4. G: Gold flash
   T: Tin plated
5. B: Black Insulator
6. Pinrex internal code.

文管中心 2020.11.04 發行章

			TOLERANCE .0 =±.30 .00 =±.20 .000 =±.XXX .0000=±. ANG.=±3°	UNITS : mm	OLD PART NO.			TITLE PIN HEADER 1.27*1.27mm SMT S/T WITH RIGHT ANGLE TYPE, SINGLE ROW REEL	頻銳科技股份有限公司 PINREX TECHNOLOGY CORP.
					DRAWER 麦文慧	CHECK 李劍			
A	RELEASE	2020/10/23		SCALE NONE	SIZE A4	SHEET 1 OF 1	REV. A	APP'D 李劍	NEW PART NO. 23F-Hx6-xxxxxx	DRAW NO. 23F-Hx6-xxxxxx(網頁專用圖)
REV.	DESCRIPTION	DATE							