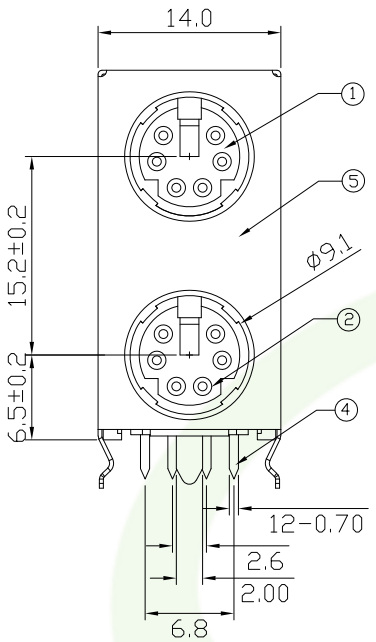

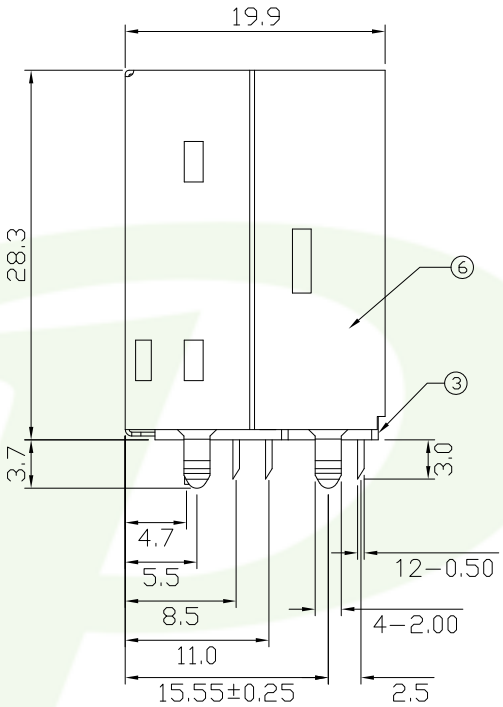

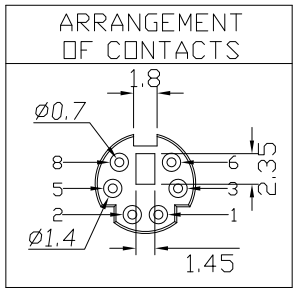

Specification:

Contact Resistance: 30m Ohm Max.
Insulation Resistance: 100M Ohm Min.AT 500V DC
Rated Voltage And Current: DC12V.2A Max;AC 100V.1A Max
Dielectric Withstanding Voltage: 250V AC For 1 Minute
Durability (Life Test): 100 Cycles
Insertion Force: 4.0KG Maximum.
Extraction Force: 0.9KG Minimum.

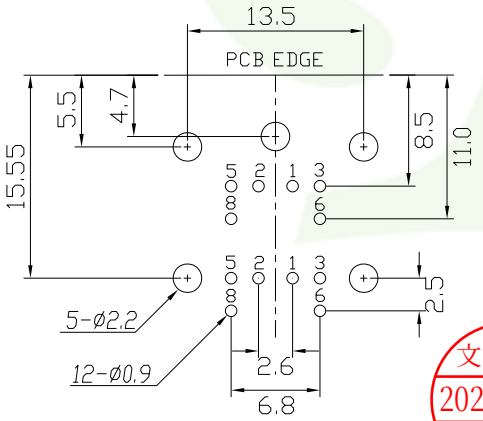

PCB LAYOUT
(BOTTOM VIEW)

文管中心
2020.10.29
發行章

NO.	NAME	MATERIAL	FINISH	REMARK	Q'TY
1	TOP HOUSING	PBT G.F.	BLACK		1
2	BOTTOM HOUSING	PBT G.F.	BLACK		1
3	BACK COVER	PBT G.F.	BLACK		1
4	CONTACT TERM.	PHOS. BRONZE T:0.2	GOLD/TIN PLATED	Gold:1~3u"; NI:40~60u"; TIN:120u" (100% pure Tin of lead free plating)	12
5	FRONT SHIELD	BRASS T:0.3	TIN PLATED	TIN:120~200u"	1
6	BACK SHIELD	BRASS T:0.3	TIN PLATED	TIN:120~200u"	1

REV.	DESCRIPTION	DATE
A	RELEASE	2020/10/19

TOLERANCE
.0 =±.25
.00 =±.13
.000 =±.0.05
.0000=±.
ANG.=±3°

UNITS : mm

OLD PART NO.					
DRAWER 劉偉哥		CHECK 李劍			
SCALE NONE	SIZE A4	SHEET 1 OF 1	REV. A	APP'D 李劍	

TITLE: MINI DIN JACK DUAL

NEW PART NO. 983-2x-006xxx

頻銳科技股份有限公司
PINREX TECHNOLOGY CORP.

DRAW NO. 983-2x-006xxx(網頁專用圖)