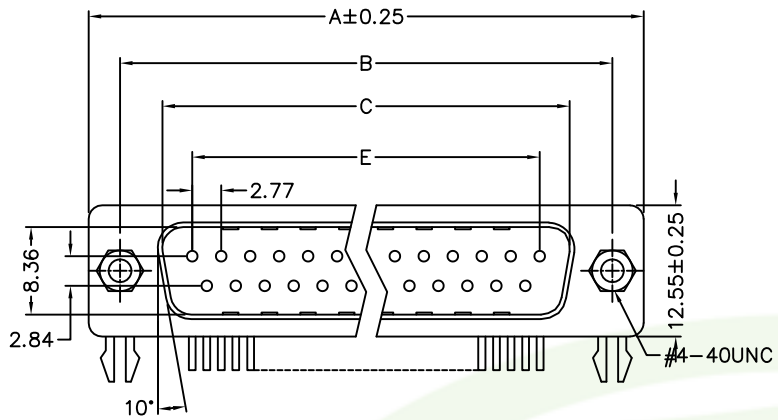

Dimensions

Positions	A	B	C	E
9	30.81	24.99	16.92	11.08
15	39.20	33.30	25.25	19.39
25	53.05	47.04	38.96	33.24
37	69.40	63.50	55.42	49.86

Product Specification

Material

Insulator : Glass-Filled Thermoplastic PBT, UL94V-0
Contact : Copper alloy
Shell : Steel, 60u" Nickel Over 50u" min Copper
Clinch Nut : Copper alloy, Nickel Plated.
Boardlock : Steel, Tin Plated.
Screwlock : Steel, Nickel Plated.

Electrical

Contact Resistance : 20 milliohms
Insulation Resistance : 1000 magohms at 500 VDC
Dielectric Withstanding Voltage : 1000 VAC/rms 60Hz for 1 minute
Current Rating : 3 AMP
Volatge Rating : 250 VAC/rms 60Hz

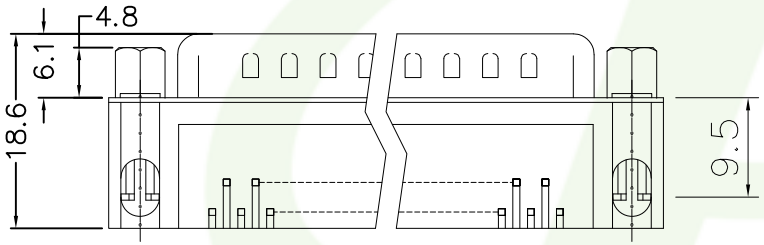

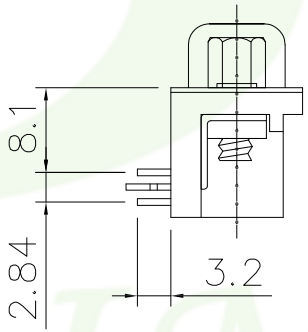

7.2mm Footprint

982– 1 1 – A xx x x x
1 2 3 4 5 6 7

1. 1: Right angle
2. 1: Tray
3. A: FP 7.2 Male(Green product)
4. No. of contacts(9 ,15,27,37)
5. 0: Black insulator ;Boardlock "Z",Selective
   1: Black insulator ;Boardlock "Z",Gold flash
6. 1: Jack screws inserted
   2: Rivet
   3: Rivet & Jack screws attached
   4: Rivet & Jack screws inserted
7. x: Pinrex internal code.

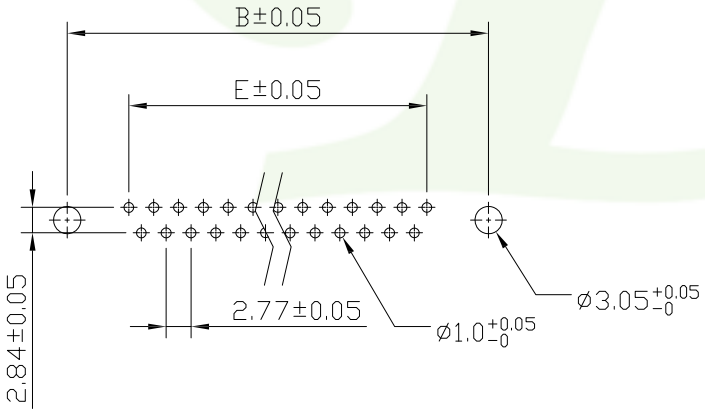

RECOMMENDED PCB LAYOUT

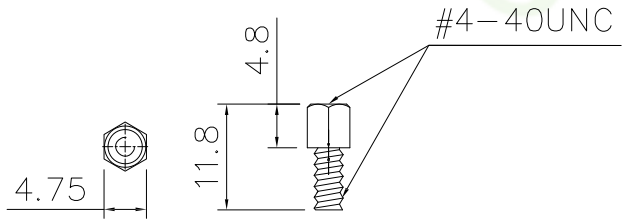

#4-40 unc screwlock installed

文管中心
2020.10.21
發行章

			TOLERANCE .0 =±.30 .00 =±.25 .000 =±.13 .0000=±. ANG.=±3°	UNITS : mm	OLD PART NO.			TITLE D-SUB R/A FP7.2 MALE	頻銳科技股份有限公司 PINREX TECHNOLOGY CORP.
					DRAWER 麦文慧		CHECK 李創		
A	RELEASE	2020/10/21		SCALE NONE	SIZE A4	SHEET 1 OF 1	REV. A	APP'D 李創	NEW PART NO. 982-11-Axxxxx	DRAW NO. 982-11-Axxxxx(網頁專用圖)
REV.	DESCRIPTION	DATE							