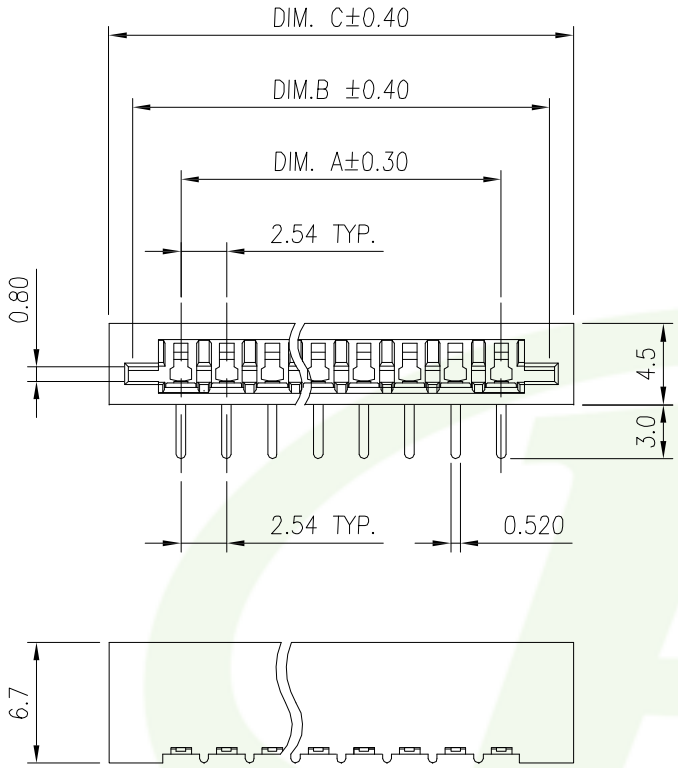

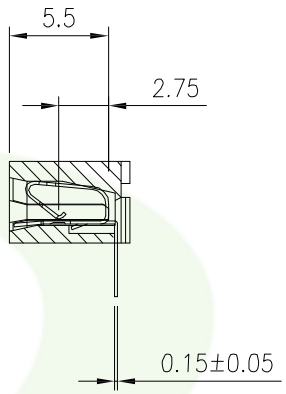

NOTE:

1.MATERIAL:

HOUSING: HIGH TEMPERATURE THERMOPLASTIC. UL94V-0；COLOR: BLACK.

CONTACT: COPPER ALLOY.

2.FINISH:

TERMINAL:

CONTACT AREA: TIN PLATING 100 u" THICKNESS MIN.

SOLDERING AREA: TIN PLATING 100 u" THICKNESS MIN.;

UNDER PLATING: NICKEL PLATING 50 u" THICKNESS MIN. OVERALL.

979– 1 1 – 2 xx 3 0 x
1 2 3 4 5 6 7

1. 1: Pitch=2.54
2. 1: Tube
3. 0: None ZIF
   2: None ZIF (Green Product)
4. No. of contacts
5. 3: 90° Dual contact
6. 0: Tin plated; Black Insulator
7. Pinrex internal code.

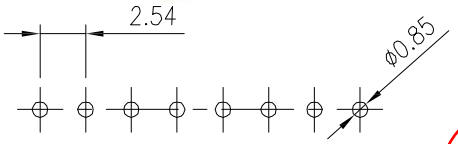

RECOMMENDED PCB LAYOUT
TOLERANCES:±0.05

文管中心
2020.10.27
發行章

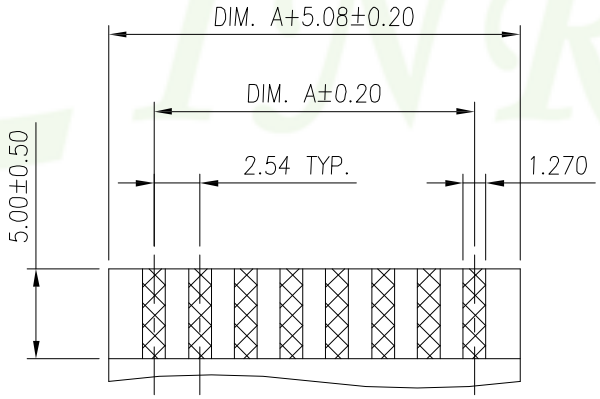

FPC/FFC T=0.30±0.05

Pos.	Dimension A	Dimension B	Dimension C	Pos.	Dimension A	Dimension B	Dimension C
2	2.54	8.43	10.54	15	35.56	41.45	43.56
3	5.08	10.97	13.08	16	38.10	43.99	46.10
4	7.62	13.51	15.62	17	40.64	46.53	48.64
5	10.16	16.05	18.16	18	43.18	49.07	51.18
6	12.70	18.59	20.70	19	45.72	51.61	53.72
7	15.24	21.13	23.24	20	48.26	54.15	56.26
8	17.78	23.67	25.78	21	50.80	56.69	58.80
9	20.32	26.21	28.32	22	53.34	59.23	61.34
10	22.86	28.75	30.86	23	55.88	61.77	63.88
11	25.40	31.29	33.40	24	58.42	64.31	66.42
12	27.94	33.83	35.94	25	60.96	66.85	68.96
13	30.48	36.37	38.48	26	63.50	69.39	71.50
14	33.02	38.91	41.02				

REV.	DESCRIPTION	DATE
A	RELEASE	2020/10/27

TOLERANCE
.0 =±.30
.00 =±.20
.000 =±.XXX
.0000=±.
ANG.=±3°

UNITS : mm

SCALE NONE | SIZE A4

OLD PART NO.

DRAWER 刘伟青 | CHECK 李剑

SHEET 1 OF 1 | REV. A | APP'D 李剑

TITLE
FPC/FFC 2.54mm NON ZIF
DIDE ENTRY , DUAL CONTACT
RIGHT ANGLE TYPE

NEW PART NO. 979–11–2xx30x

頻銳科技股份有限公司
PINREX TECHNOLOGY CORP.

DRAW NO. 979–11–2xx30x(網頁專用圖)