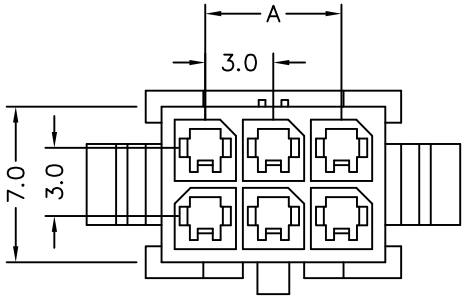

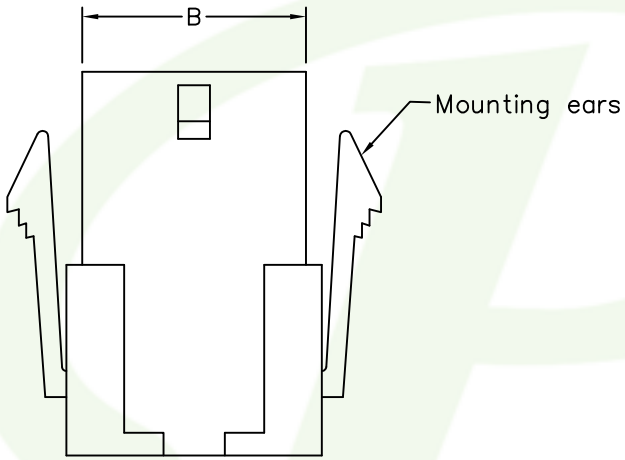

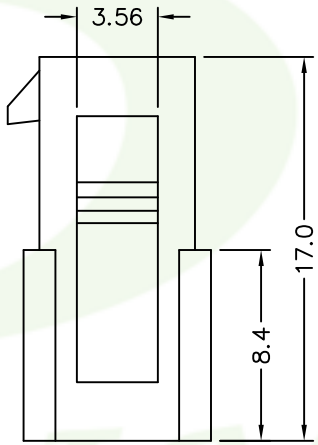

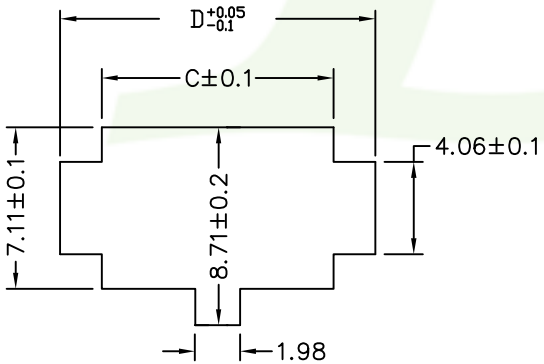

PANEL OPENING

MATERIAL

Insulator : UL 94-V0 Nylon66

SPECIFICATION

Current Rate :

Wire size	# 20	# 22	# 24	# 26	# 28	# 30
AMP	5A	5A	4A	3A	2A	1A

Voltage rating : 250V AC(RMS) or DC
Dielectric Strength : 1500V AC/minute
Insulation resistance : 1000mΩmin.
Temperature rise : 30°C max.(carry rated current load)

733-7 5- F 2 xx x x
1 2 3 4 5 6

1. 5: Housing
2. F: Female
3. 2: Dual rows
4. No. of contacts
5. B: Black Insulator
6. Pinrex internal code.

文管中心
2020.11.26
發行章

POLES	DIM A	DIM B	DIM C	DIM D
2		4.0	4.21	7.90
4	3.0	7.0	7.21	10.90
6	6.0	10.0	10.21	13.89
8	9.0	13.0	13.21	16.89
10	12.0	16.0	16.21	19.89
12	15.0	19.0	19.21	22.89
14	18.0	22.0	22.20	25.88
16	21.0	25.0	25.20	28.88
18	24.0	28.0	28.20	31.88
20	27.0	31.0	31.22	34.87
22	30.0	34.0	34.22	37.87
24	33.0	37.0	37.22	40.87

REV.	DESCRIPTION	DATE
A	RELEASE	2020/11/24

TOLERANCE
.0 =±.30
.00 =±.20
.000 =±.XXX
.0000=±.
ANG.=±3°

UNITS : mm
SCALE NONE
SIZE A4

OLD PART NO.
DRAWER 麦文慧
CHECK 李創
SHEET 1 OF 1
REV. A
APP'D 李創

TITLE
Power Connector 3.0mm
Dual Rows Housing(Female)

NEW PART NO. 733-75-F2xxxx

频锐科技股份有限公司
PINREX TECHNOLOGY CORP.

DRAW NO. 733-75-F2xxxx(網頁專用圖)