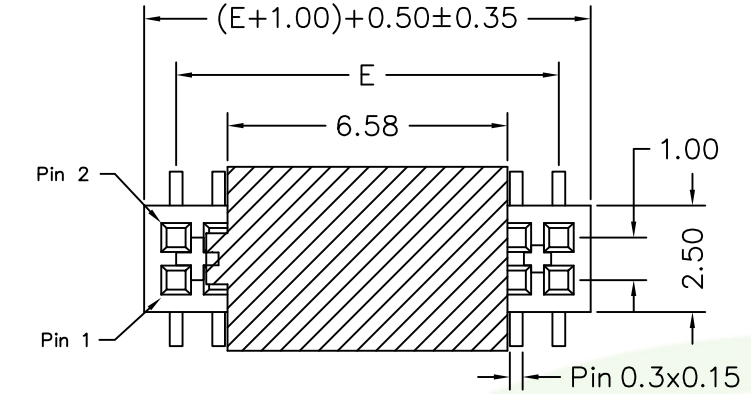

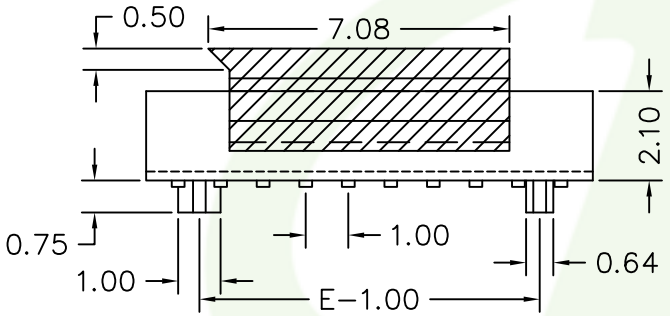

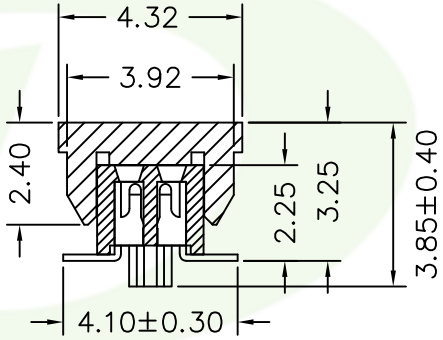

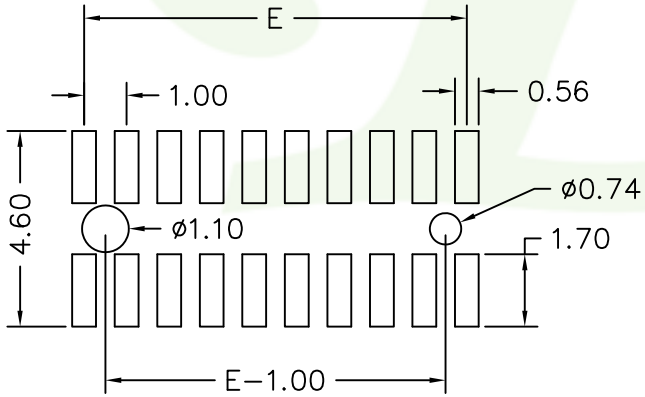

Recommended P.C.B Layout

MATERIAL

Contact Pin : Phosphor Bronze
Insulator : Thermoplastic High Temp UL94−V0

SPECIFICATION

Current Rate : 1 AMP
Insulation Resistance : 5000MΩMin.
Contact Resistance : 20mΩMax.
Dielectric Voltage : AC 500V for one minute

650−x 2− xx x x xx
(1) (2) (3) (4) (5) (6)

1. 7: Green Product
   9: Green Product High Temp
2. 2: Dual rows
3. No. of contacts
4. G: Gold flash
   T: Tin plated
5. B: Black Insulator
6. Pinrex internal code.

POLES	DIM E
3	2.00
4	3.00
5	4.00
6	5.00
7	6.00
8	7.00
9	8.00
10	9.00
11	10.00
12	11.00
13	12.00
14	13.00
15	14.00
16	15.00
17	16.00
18	17.00
19	18.00
20	19.00

文管中心
2020.11.05
發行章

REV.	DESCRIPTION	DATE
A	RELEASE	2020/10/29

TOLERANCE
.0 =±.30
.00 =±.25
.000 =±.XXX
.0000=±.
ANG.=±3°

UNITS : mm
SCALE NONE
SIZE A4

OLD PART NO.
DRAWER 麦文慧
CHECK 李劍
SHEET 1 OF 1
REV. A
APP'D 李劍

TITLE
FEMALE HEADER 1.0*1.0mm
SMT TYPE, DUAL ROWS
HEIGHT 2.1mm CAP+T/R

NEW PART NO. 650−x2−xxxxxx

頻銳科技股份有限公司
PINREX TECHNOLOGY CORP.

DRAW NO. 650−x2−xxxxxx(網頁專用圖)