SEACUBE
ONE-STOP PARTS SOLUTION

YAMAHA

PARTS CATALOGUE
CATALOGUE DE PIECES DETACHEES

www.seacubemoto.com

YD110-1 (BY11)

1RBY1-600F1

( )

YAMAHA GENUINE Parts & Accessories

2017/6/15

NEWS NO.	DATE	COMMENT
PE0-MC-170013	Feb.,17,2017	MOD:FIG.2 CRANKSHAFT & PISTON LIST/ILLUSTRATION REVISION
PE0-MC-170049	May,12,2017	MOD:FIG.12 CLUTCH LIST/ILLUSTRATION REVISION
PE0-MC-170071	Jun.,9,2017	MOD:FIG.6 INTAKE LIST/ILLUSTRATION REVISION

SEACUBE
ONE-STOP PARTS SOLUTION

www.seacubemoto.com

YD110-1
CATALOGUE DE PIECES DETACHEES
©2017 par Yamaha Motor Co., Ltd.
1re édition, février 2017
Tous droits réservés
Toute réimpression ou utilisation
non autorisée sans la permission écrite
de la Yamaha Motor Co., Ltd.
est formellement interdite.
Imprimé au Japon

YD110-1
PARTS CATALOGUE
©2017 by Yamaha Motor Co., Ltd.
1st edition, February 2017
All rights reserved.
Any reprinting or unauthorized use
without the written permission of
Yamaha Motor Co., Ltd.
is expressly prohibited.
Printed in Japan.

SEACUBE
ONE-STOP PARTS SOLUTION

AVANT–PROPOS

e pièces détachées concerne les pièces pour le(s) modèle(s) indiqué(s) sur la page de couverture. Lorsque vous commandez des pièces de rechange, veuillez vous référer à ce catalogue de pieces détachées et indiquer clairement les numéros et les noms des pièces détachées.

1. Les modifications ou ajouts ayant été effectués après la parution du catalogue de pièces détachées seront décrits dans les Bulletins d'information concernant les pièces détachées.
   Il est recommandé que vous apportiez les corrections nécessaires au catalogue des pièces détachées en vous référant aux Bulletins d'information.

2. Abréviations
   Dans ce catalogue, les abréviations suivantes sont utilisées:
   "UR" Utiliser le numéro de pièces spécifié.
   "UN" Utiliser autant que nécessaire.
   "AP" Pièces de substitution
   "LM" Fabrication locale (les pièces doivent être commandées localement.)
   "F#" N° de cadre (applicable au N° de série)
   "O/S" Surdimensionné

www.seacubemoto.com

3. Nombre de pièces d'un assemblage
   - Les pièces fournies comme composants d'un assemblage sont précédées d'un point (.) de la manière indiquée ci–dessous.
   - Le chiffre apparaissant à la droite de chaque composant indique la quantité de pièces pour chaque unité d'assemblage.

N° PIECES	DESCRIPTION	QTE	REMARQUES
2F5–83310–60	ENS. CLIGNOTANT AVANT	2	
115–83311–60	.AMPOULE (6V–18W)	1	

4. Les couleurs concernant les graphiques sont indiquées dans la colonne "REMARQUES", comme indiqué ci–dessous.

N° PIECES	DESCRIPTION	QTE	REMARQUES
2N4–24110–00–X5	RESERVOIR A ESSENCE.	2	MXR
3J1–24240–10	.GRAPHIQUE	1	POUR MXR

5. Veuillez noter que les illustrations sont indiquées à titre de référence pour trouver les numéros de pièces, non pour être utilisées lors de l'assemblage. Lors de l'assemblage, veuillez utiliser le manuel d'entretien adéquat.

6. L'astérisque (*) placé devant un numéro de référence indique des éléments qui ont été modifiés après la première édition.

SEACUBE
ONE-STOP PARTS SOLUTION

FOREWORD

ogue is related to the parts for the model(s) on the cover page. When you are ordering replacement parts, please refer to this Parts Catalogue and quote both part numbers and part names correctly.

1. Modifications or additions which have been made after the issue of the Parts Catalogue will be announced in the Parts News.
   It is advisable that you make the necessary corrections to the Parts Catalogue according to the Parts News.

2. Abbreviations
   The following abbreviations are used in this Parts Catalogue.
   "UR" Use specified parts number.
   "UN" Use as many as needed.
   "AP" Alternate Parts
   "LM" Locally Made (Parts need to be ordered locally)
   "F#" Frame No. (Applicable machine No.)
   "O/S" Over Size

www.seacubemoto.com

3. The number of components for assembly
   - Parts, which are to be supplied in an assembly, are listed with a dot (.) in front of the part name as shown below.
   - The numeral appearing to the right of each component part indicates the quantity of parts for each assembly unit.

PART NO.	DESCRIPTION	Q'TY	REMARKS
2F5–83310–60	FRONT FLASHER LIGHT ASSY	2	
115–83311–60	.BULB (6V–18W)	1	

4. Applicable colours of graphics are represented in the "REMARKS" as shown below.

PART NO.	DESCRIPTION	Q'TY	REMARKS
2N4–24110–00–X5	FUEL TANK COMP.	2	MXR
3J1–24240–10	.GRAPHIC, FUEL TANK	1	FOR MXR

5. Note that the illustrations for reference in finding parts numbers are not to be used for assembling. When assembling, please use the applicable service manual.

6. The asterisk (*) before a reference number indicates modified items after the first edition.

SEACUBE
ONE-STOP PARTS SOLUTION

e applicable

N° de Série du cadre

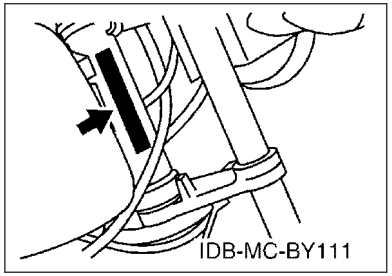

N° de Série du moteur

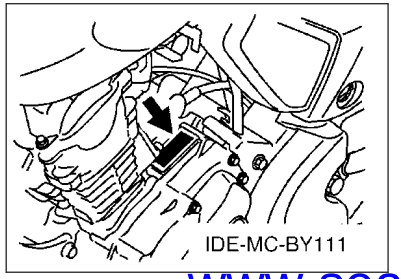

www.seacubemoto.com

8. Code couleur applicable (L'estampille (*) indique la couleur du modèle.)

Abréviation	Nom de la couleur	Code couleur
CM6(*)	CYAN METALLIC 6	1344
DRMK(*)	DEEP RED METALLIC K	0918
SMX(*)	BLACK METALLIC X	0903

9. N° de série initial applicable

N° de Série du cadre

N° de série	Nom de la colonne Qté	Code du modèle

N° de Série du moteur

N° de série	Nom de la colonne Qté	Code du modèle

SEACUBE
ONE-STOP PARTS SOLUTION

Serial No.

Frame Serial No.

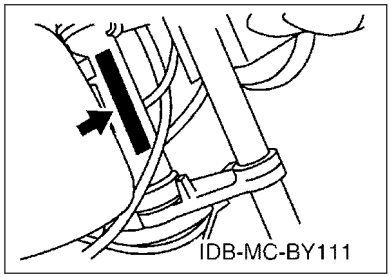

Engine Serial No.

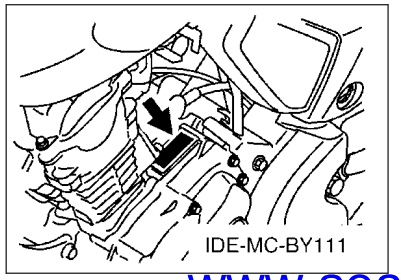

www.seacubemoto.com

8. Applicable Colour Code (The (*) mark shows Model colour.)

Abbreviation	Colour Name	Colour Code
CM6(*)	CYAN METALLIC 6	1344
DRMK(*)	DEEP RED METALLIC K	0918
SMX(*)	BLACK METALLIC X	0903

9. Applicable Starting Serial No.

Frame Serial No.

Serial No.	Name Of Q'ty Column	Model Code

Engine Serial No.

Serial No.	Name Of Q'ty Column	Model Code

SEACUBE
ONE-STOP PARTS SOLUTION

TABLE DES MATIERES

MOTEUR

CYLINDRE....1
VILEBREQUIN & PISTON....2
SOUPAPE....3
ARBRE A CAMES & CHAINE....4
POMPE A HUILE....5
ADMISSION....6
CARBURATEUR....7
ECHAPPEMENT....8
CARTER....9
COUVERCLE DE CARTER 1....10
DEMARREUR....11
EMBRAYAGE....12
TRANSMISSION....13
BARILLET & FOURCHETTE....14
AXE DE SELECT & PEDALE....15

CHASSIS

CADRE....16
PARE BOUE....17
COUVERCLE LATERAL....18
BRAS ARRIERE & SUSPENSION....19
DIRECTION....20
FOURCHE AVANT....21
RESERVOIR A CARBURANT....23
RESERVOIR A CARBURANT 2....24
SELLE....26
ROUE AVANT....27
ROUE ARRIERE....29
GUIDON & CABLE....31
SUPPORT & REPOSE PIED....32
GENERATRICE....34
CLIGNOTANT....35
COMPTEUR....37
PHARE....38
FEU ARRIERE....39
COMMUTATEUR ET LEVIER....40
PARTIE ELECTRIQUE 1....41
PARTIE ELECTRIQUE 2....42

INDEX

INDEX NUMERIQUE....43

www.seacubemoto.com

SEACUBE
ONE-STOP PARTS SOLUTION

CONTENTS

ENGINE

CYLINDER....1
CRANKSHAFT & PISTON....2
VALVE....3
CAMSHAFT & CHAIN....4
OIL PUMP....5
INTAKE....6
CARBURETOR....7
EXHAUST....8
CRANKCASE....9
CRANKCASE COVER 1....10
STARTER....11
CLUTCH....12
TRANSMISSION....13
SHIFT CAM & FORK....14
SHIFT SHAFT....15

CHASSIS

FRAME....16
FENDER....17
SIDE COVER....18
REAR ARM & SUSPENSION....19
STEERING....20
FRONT FORK....21
FUEL TANK....23
FUEL TANK 2....24
SEAT....26
FRONT WHEEL....27
REAR WHEEL....29
STEERING HANDLE & CABLE....31
STAND & FOOTREST....32
GENERATOR....34
FLASHER LIGHT....35
METER....37
HEADLIGHT....38
TAILLIGHT....39
HANDLE SWITCH & LEVER....40
ELECTRICAL 1....41
ELECTRICAL 2....42

www.seacubemoto.com

INDEX

NUMERICAL INDEX....43

SEACUBE
ONE-STOP PARTS SOLUTION

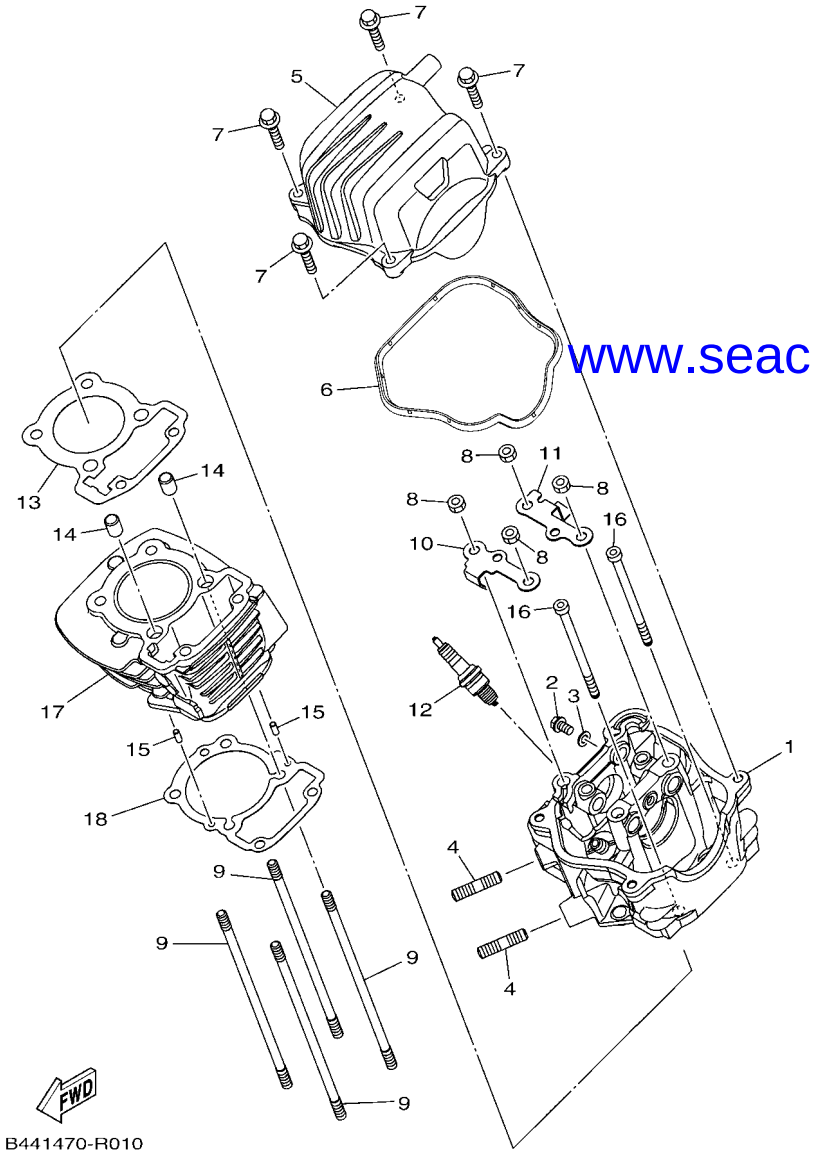

www.seacubemoto.com

FIG. 1 CYLINDRE — CYLINDER

REF. N°	N° PIECES PART NO.	DESCRIPTION DESCRIPTION	BY11					REMARQUES REMARKS
1	B44–E1111–00	CULASSE HEAD, CYLINDER 1	1					
2	95022–06010	BOULON, A COLLERETTE BOLT, FLANGE	1					
3	90430–06817	JOINT GASKET	1					
4	95612–08620	GOUJON BOLT, STUD	2					
5	B44–E1190–10	COUVERCLE, CULASSE 1 COVER, CYLINDER HEAD 1	1					
6	B44–E1193–00	JOINT, COUVERCLE DE CULASSE 1 GASKET, HEAD COVER 1	1					
7	95022–06025	BOULON, A COLLERETTE BOLT, FLANGE	4					
8	90170–07800	ECROU NUT	4					
9	B44–E1391–00	GOUJON, 1 DE CULASSE BOLT, STUD 1	4					
10	B44–E111F–00	PLAQUE PLATE	1					
11	B44–E112F–00	PLAQUE 2 PLATE 2	1					
12	94703–00894	BOUGIE D,ALLUMAGE (NGK CR6HSA) PLUG, SPARK (NGK CR6HSA)	1					
13	B44–11181–10	JOINT, DE CULASSE 1 GASKET, CYLINDER HEAD 1	1					
14	91810–14804	CLAVETTE PIN, DOWEL	2					
15	93604–10011	CLAVETTE PIN, DOWEL	2					
16	90110–06843	BOULON, TETE HEXAGONALE CREUSE BOLT, HEXAGON SOCKET HEAD	2					
17	B44–E1310–00	CYLINDRE CYLINDER	1					
18	B44–E1351–10	JOINT, D'EMBASE GASKET, CYLINDER	1					

SEACUBE
ONE-STOP PARTS SOLUTION

FIG. 2 VILEBREQUIN & PISTON — CRANKSHAFT & PISTON

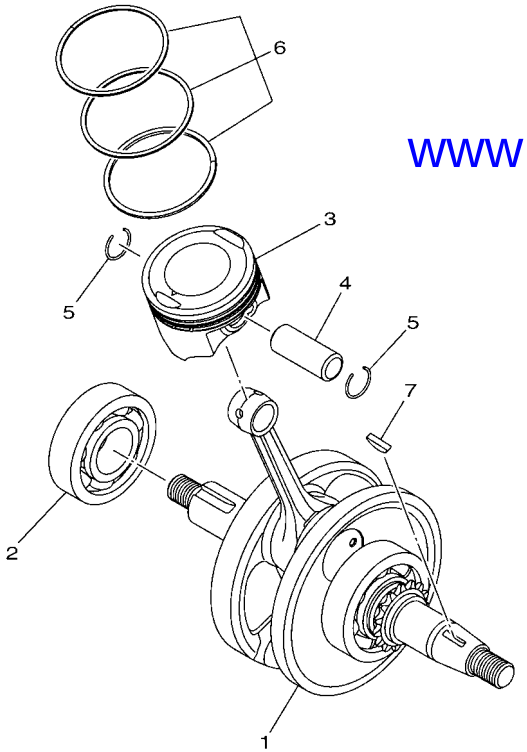

B441470-R020

www.seacubemoto.com

REF. N°	N° PIECES PART NO.	DESCRIPTION DESCRIPTION	BY11					REMARQUES REMARKS
1	B44–WE140–00	VILEBREQUIN COMPLET CRANKSHAFT ASSY	1					Go to P/N : PE0-MC-170013
2	93306–304YU	ROULEMENT BEARING	1					
3	B44–E1631–00	PISTON (STD) PISTON (STD)	1					
	B44–E1636–09	PISTON (0.50MM O/S) PISTON (0.50MM O/S)	1					AP AP
	B44–E1638–09	PISTON (1.00MM O/S) PISTON (1.00MM O/S)	1					AP AP
4	B44–E1633–00	AXE, PISTON PIN, PISTON	1					
5	93450–14088	CIRCLIP, TYPE S CIRCLIP	2					
6	B44–E1603–00	JEU DE SEGMENTS (STD) PISTON RING SET (STD)	1					
	B44–E1605–00	JEU DE SEGMENTS (0.50MM O/S) PISTON RING SET (0.50MM O/S)	1					AP AP
	B44–E1607–00	JEU DE SEGMENTS (1.00MM O/S) PISTON RING SET (1.00MM O/S)	1					AP AP
7	90280–03017	CLAVETTE, DEMI-LUNE KEY, WOODRUFF	1					

SEACUBE
ONE-STOP PARTS SOLUTION

RTS NEWS

YAMAHA
YAMAHA MOTOR CO., LTD.
2500 SHINGAI IWATA SHIZUOKA JAPAN

News No. PE0-MC-170013 (1/2)

Date: Feb.,17,2017

Signature: K. Tanaka

Cause : ☐ Revision Notice ☐ Correction ☑ Sales Unit Change ☐ Others

Model	YD110 / YD110D
Subject	PARTS CATALOGUE CORRECTIONS
CATALOGUE NO.	See the"List of Models and CATALOGUE No's below."

Time of YPEC Revision Text, Illustration --> Mar./20/2017 PDF Replace --> Mar./20/2017
(YPEC = Yamaha Parts Electrical Catalogue = Website parts catalogue)

FIG.2 CRANKSHAFT & PISTON

www.seacubemoto.com

1. LIST CORRECTION

Fig. No.	Ref. No.	PART NO.	DESCRIPTION	Q'TY	REMARKS
2	1	B44-WE140-00	CRANKSHAFT ASSY	1	No change
	8	**B44-E1681-00**	**. PIN, CRANK 1**	**1**	***Added part**
	9	**93310-325X8**	**. BEARING**	**1**	
	10	**B44-E1651-00**	**. ROD, CONNECTING**	**1**	
	11	**B44-E1422-00**	**. CRANK 2**	**1**	
	12	**B44-E3452-00**	**. COVER, ROTOR FILTER**	**1**	

* These changes are applied from initial production.

2. ILLUSTRATION CORRECTION

(OLD) (NEW)

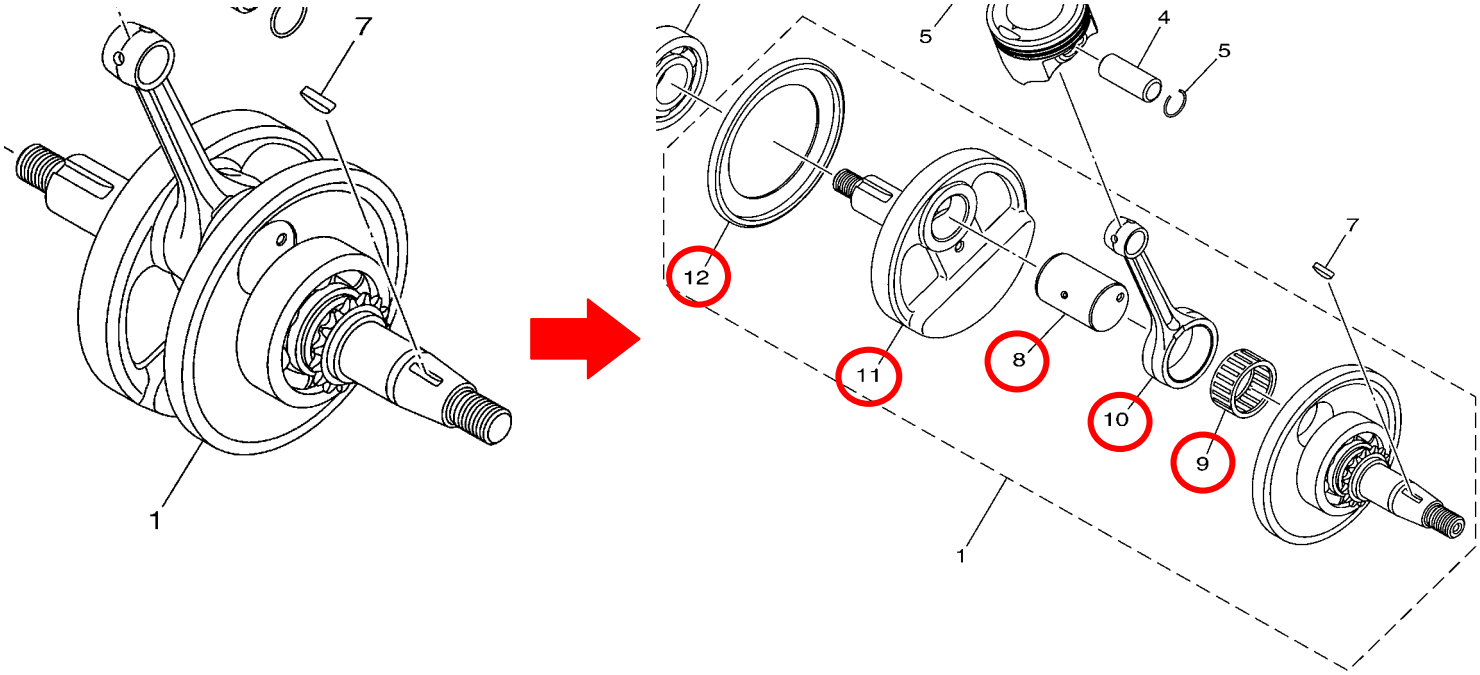

Parts Manager Check	Service Manager Check	Parts Manager File

YAMAHA MOTOR CO.,LTD
2500 Shingai Iwata Shizuoka 438-8501.Japan
Parts & Acc. Engineering Div., YMC

YAMAHA GENUINE Parts & Accessories

SEACUBE
ONE-STOP PARTS SOLUTION

RTS NEWS

YAMAHA
YAMAHA MOTOR CO., LTD.
2500 SHINGAI IWATA SHIZUOKA JAPAN

News No. PE0-MC-170013 (2/2)

Date: Feb.,17,2017

Signature: K. Tanaka

Cause : ☐ Revision Notice ☐ Correction ☑ Sales Unit Change ☐ Others

Model	YD110 / YD110D
Subject	PARTS CATALOGUE CORRECTIONS
CATALOGUE NO.	See the"List of Models and CATALOGUE No's below."

Time of YPEC Revision Text, Illustration --> Mar./20/2017 PDF Replace --> Mar./20/2017
(YPEC = Yamaha Parts Electrical Catalogue = Website parts catalogue)

FIG.2 CRANKSHAFT & PISTON

www.seacubemoto.com

3. LIST of Models and CATALOGUE No's.

The applicable MODELS, MODEL CODES, and CATALOGUE No's are as follows.

MODEL NAME	MODEL CODE	MODEL YEAR	CATALOGUE NO.
YD110-1	BY11	2016	1RBY1-600F1 1RBY1-600P1
YD110-1	BY21	2017	1SBY2-600F1
YD110-1	B691	2017	1SB69-600F1
YD110D-4	BY41	2017	1RBY4-600F1 1RBY4-600S1
YD110D-4	BY51	2017	1SBY5-600F1
YD110D-4	BX61	2017	1SBX6-600F1 1SBX6-600S1

Thank you very much for your cooperation.

Parts Manager Check	Service Manager Check	Parts Manager File

YAMAHA MOTOR CO.,LTD
2500 Shingai Iwata Shizuoka 438-8501.Japan
Parts & Acc. Engineering Div., YMC

YAMAHA GENUINE Parts & Accessories

SEACUBE
ONE-STOP PARTS SOLUTION

FIG. 3 SOUPAPE VALVE

REF. N°	N° PIECES PART NO.	DESCRIPTION DESCRIPTION	BY11					REMARQUES REMARKS
1	B44–E2111–00	SOUPAPE, ADMISSION VALVE, INTAKE	1					
2	B44–E2121–00	SOUPAPE, ECHAPPEMENT VALVE, EXHAUST	1					
3	1GC–E2119–00	JOINT, QUEUE DE SOUPAPE SEAL, VALVE STEM	2					
4	1GC–E2113–00	RESSORT DE SOUPAPE, INTERNE SPRING, VALVE INNER	2					
5	1AA–12118–00	FRAISE, SOUPAPE LOCK, VALVE SPRING RETAINER	4					UR UR
	5TL–E2118–00	FRAISE, SOUPAPE LOCK, VALVE SPRING RETAINER	4					UR UR
6	1GC–E2117–00	BUTEE DE RESSORT DE SOUPAPE RETAINER, VALVE SPRING	2					
7	B44–E2126–00	SIEGE, RESSORT DE SOUPAPE2 SEAT, VALVE SPRING 2	2					
8	B44–E2151–00	CULBUTEUR ARM, VALVE ROCKER	2					
9	90170–05302	ECROU NUT	2					
10	1GC–E2159–00	VIS, REGLAGE DE SOUPAPE SCREW, VALVE ADJUSTING	2					
11	B44–E2146–00	AXE, CULBUTEUR SHAFT, ROCKER	1					
12	B44–E2156–00	AXE, CULBUTEUR 2 SHAFT, ROCKER 2	1					
13	95022–06016	BOULON, A COLLERETTE BOLT, FLANGE	2					

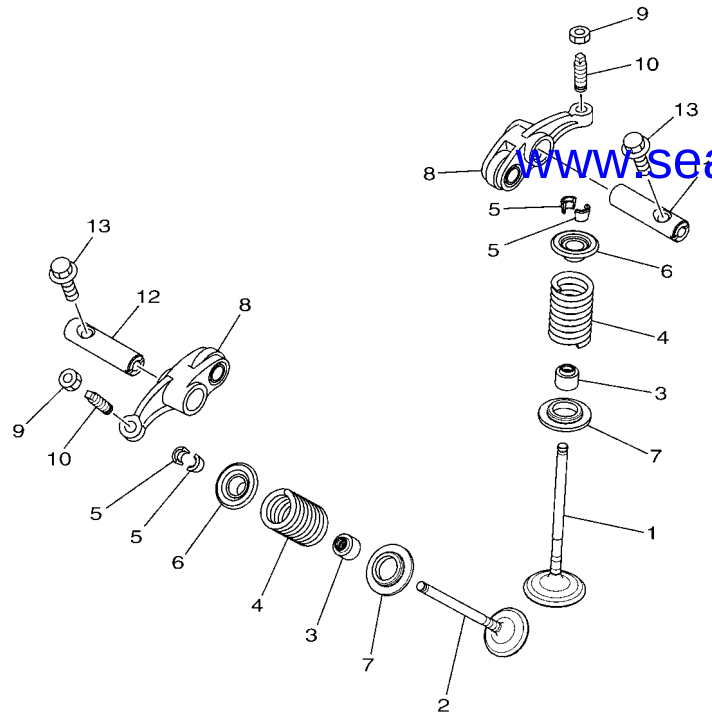

www.seacubemoto.com

FWD

B441470-R030

SEACUBE
ONE-STOP PARTS SOLUTION

FIG. 4 ARBRE A CAMES & CHAINE — CAMSHAFT & CHAIN

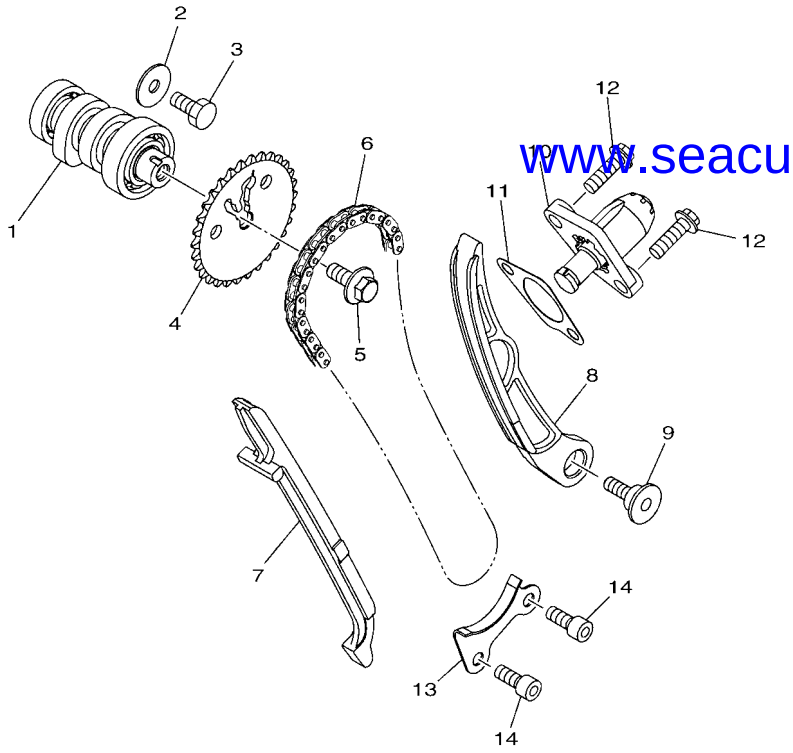

www.seacubemoto.com

REF. N°	N° PIECES PART NO.	DESCRIPTION DESCRIPTION	BY11					REMARQUES REMARKS
1	B44–WE217–00	ENS ARBRE A CAMES 1 CAMSHAFT ASSY 1	1					
2	90201–06883	RONDELLE, PLATE WASHER, PLATE	1					
3	90101–06834	BOULON BOLT	1					
4	B44–E2176–00	PIGNON, CHAINE DE DISTRIBUTION SPROCKET, CAM CHAIN	1					
5	90105–07801	BOULON BOLT, FLANGE	1					
6	94568–G3086	CHAINE CHAIN	1					
7	1GC–E2231–00	GUIDE, BUTEE 1 GUIDE, STOPPER 1	1					
8	B44–E2241–00	GUIDE, BUTEE 2 GUIDE, STOPPER 2	1					
9	1GC–E2228–00	BOULON BOLT	1					
10	B44–E2210–00	TENDEUR DE CHAINE DISTRIBUTION TENSIONER ASSY, CAM CHAIN	1					
11	B44–E2213–00	JOINT, CARTER DE TENDEUR GASKET, TENSIONER CASE	1					
12	95022–06020	BOULON, A COLLERETTE BOLT, FLANGE	2					
13	B44–E2437–00	RETENUE STOPPER	1					
14	91312–06012	BOULON BOLT	2					

SEACUBE
ONE-STOP PARTS SOLUTION

FIG. 5 POMPE A HUILE — OIL PUMP

REF. N°	N° PIECES PART NO.	DESCRIPTION DESCRIPTION	BY11					REMARQUES REMARKS
1	B44–E3300–00	POMPE A HUILE COMPLETE OIL PUMP ASSY	1					
2	90111–05035	BOULON BOLT,HEX. SOCKET BUTTON	2					
3	90340–12808	PLOT, FILETE DROIT PLUG, STRAIGHT SCREW	1					
4	90430–12227	JOINT GASKET	1					
5	4LS–E3411–00	FILTRE, HUILE STRAINER, OIL	1					

www.seacubemoto.com

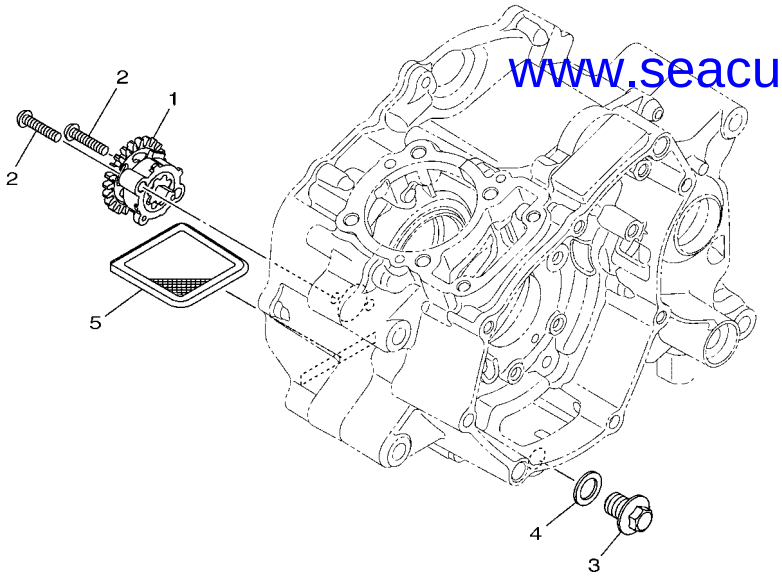

B441470-R050

SEACUBE
ONE-STOP PARTS SOLUTION

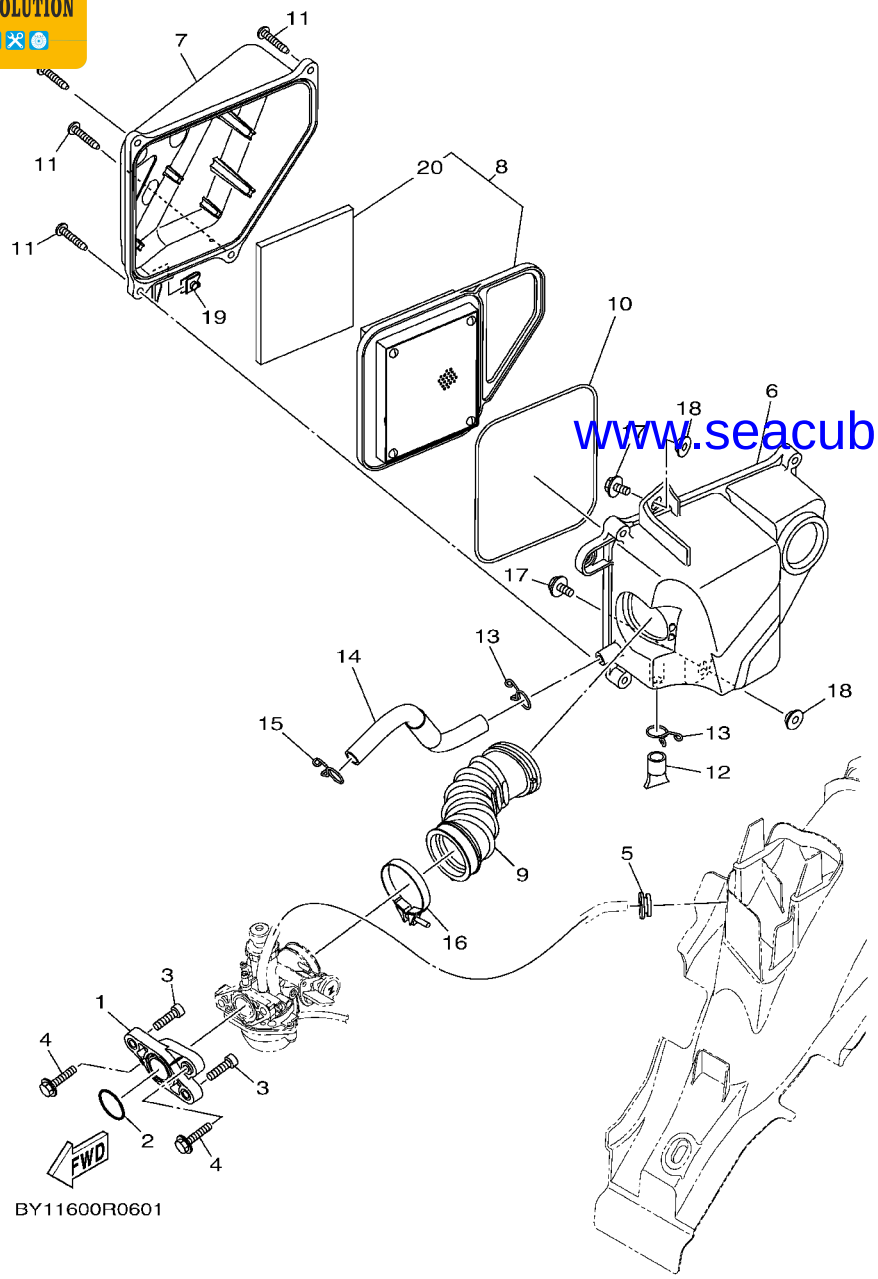

www.seacubemoto.com

FIG. 6 ADMISSION INTAKE

REF. N°	N° PIECES PART NO.	DESCRIPTION DESCRIPTION	BY11					REMARQUES REMARKS
1	B44–E3585–00	TUBULURE MANIFOLD	1					
2	93210–25813	JOINT TORIQUE O-RING	1					
3	91312–06025	BOULON, TETE HEXAGONALE CREUSE BOLT, HEXAGON SOCKET HEAD	2					
4	95022–06025	BOULON, A COLLERETTE BOLT, FLANGE	2					
5	90480–13398	PASSE-FIL GROMMET	1					
6	B69–E4411–00	BOITIER, FILTRE A AIR 1 CASE, AIR CLEANER 1	1					
7	B44–E4412–00	COUVERCLE DE BOITIER DE FILTRE CAP, CLEANER CASE 1	1					
8	B44–E4450–00	ELEMENT CPLT.FILTRE A AIR ELEMENT ASSY, AIR CLEANER	1					
9	B44–E4453–00	RACCORD, FILTRE A AIR 1 JOINT, AIR CLEANER 1	1					
10	B44–E4452–00	JOINT SEAL	1					
11	97702–50025	VIS, TETE FRAISEE SCREW, TAPPING	4					
12	B44–E443E–00	TUBE, VIDANGE PIPE, DRAIN	1					
13	90467–15012	JONC CLIP	2					
14	B44–E1166–00	DURITE, DE RENIFLARD 1 PIPE, BREATHER 1	1					
15	90467–15012	JONC CLIP	1					
16	90450–48804	BRIDE, DE DURITE HOSE CLAMP ASSY	1					
17	95802–06012	BOULON XZ550-82 BOLT, FLANGE	2					
18	90387–068P1	COLLERETTE COLLAR	2					
19	90183–06818	ECROU, RESSORT NUT, SPRING	1					
20	B44–E4451–00	.ELEMENT, FILTRE A AIR .ELEMENT, AIR CLEANER	1					

SEACUBE
ONE-STOP PARTS SOLUTION

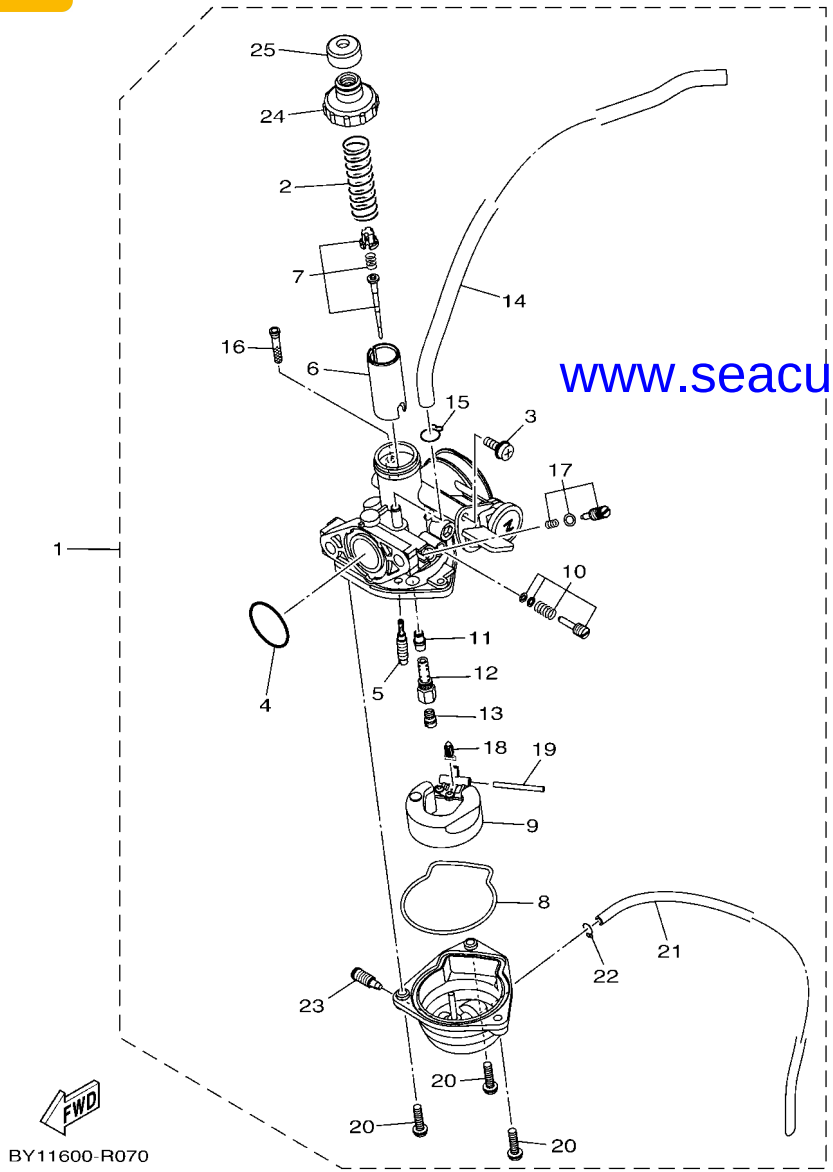

FIG. 7 CARBURATEUR — CARBURETOR

REF. N°	N° PIECES PART NO.	DESCRIPTION DESCRIPTION	BY11					REMARQUES REMARKS
1	B69–E4101–00	CARBURATEUR 1 COMPLET CARBURETOR ASSY 1	1					
2	B44–14131–00	.RESSORT, BOISSEAU .SPRING, THROTTLE VALVE	1					
3	97602–04110	.VIS .SCREW, PAN HEAD WITH WASHER	1					
4	2JG–14147–00	.JOINT TORIQUE .O-RING	1					
5	B44–14142–12	.GICLEUR, RALENTI (# 12.5) .JET, PILOT (# 12.5)	1					
6	B69–14112–30	.BOISSEAU 1 .VALVE, THROTTLE 1	1					
7	B44–1490J–00	.JEU D'AIGUILLES .NEEDLE SET	1					
8	B44–14147–00	.JOINT TORIQUE .O-RING	1					
9	3XG–14185–00	.FLOTTEUR .FLOAT	1					
10	B44–14103–00	.JEU DE VIS D'ACCELERATION .THROTTLE SCREW SET	1					
11	B44–14141–32	.PUITS D'AIGUILLE .NOZZLE, MAIN	1					
12	B44–1496A–10	.PUITS D'AIGUILLE .HOLDER, NEEDEL JET	1					
13	3G2–1423E–39	.GICLEUR, PRINCIPAL .JET, MAIN (#98.8)	1					
14	B44–14197–00	.DURITE .PIPE	1					
15	55X–14937–00	.JONC .CLIP	1					
16	5LW–14994–00	.DURITE .NET, FILTER	1					
17	B44–14104–00	.JEU DE VIS DE DOSAGE D'AIR .AIR SCREW SET	1					
18	5TN–14150–00	.POINTEAU .NEEDLE ASSY	1					
19	127–14186–00	.AXE, FLOTTEUR .PIN, FLOAT	1					
20	97602–04116	.VIS .SCREW, PAN HEAD WITH WASHER	3					
21	B44–14196–00	.DURITE .PIPE, OVER FLOW 1	1					
22	22F–14139–00	.JONC DE DURITE .CLIP, PIPE	1					
23	1PM–14191–00	.PLOT, VIDANGE .PLUG, DRAIN	1					
24	B44–14158–00	.DESSUS, CHAMBRE DE MELANGE .TOP, MIXING CHAMBER	1					
25	B44–14169–00	.COUVERCLE .CAP	1					

www.seacubemoto.com

SEACUBE
ONE-STOP PARTS SOLUTION

FIG. 8 ECHAPPEMENT — EXHAUST

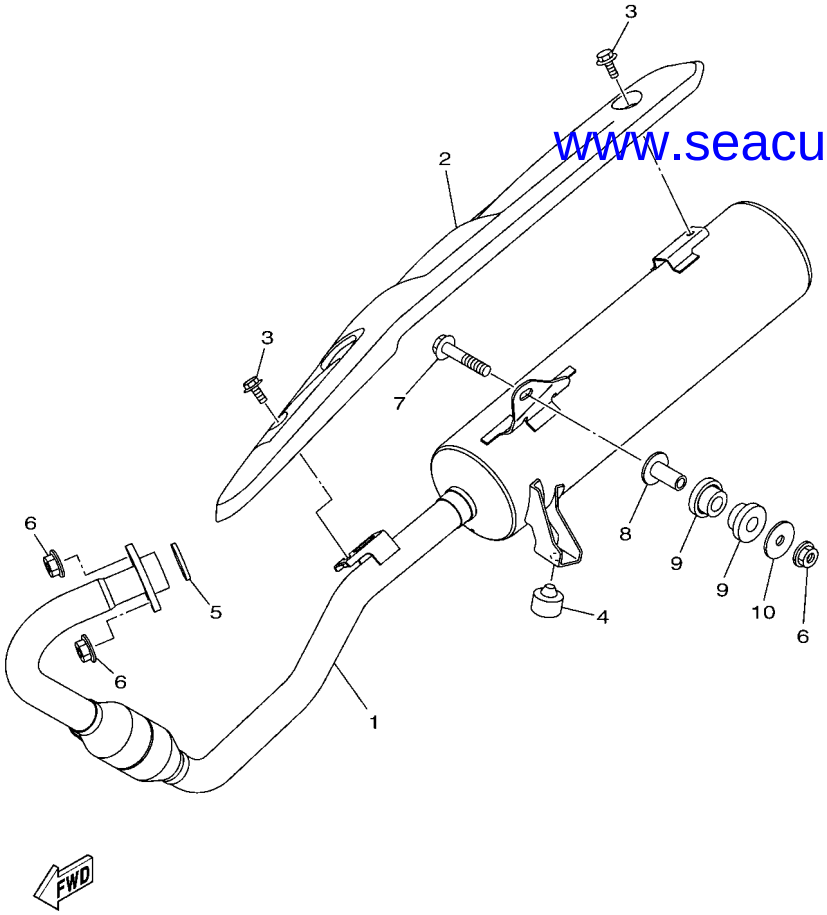

www.seacubemoto.com

REF. N°	N° PIECES PART NO.	DESCRIPTION DESCRIPTION	BY11					REMARQUES REMARKS
1	B69–E4711–00	POT D'ECHAPPEMENT 1 MUFFLER 1	1					
2	B44–E4718–00	PROTECTEUR, POT D'ECHAP 1 PROTECTOR, MUFFLER 1	1					
3	95812–06014	BOULON BOLT, FLANGE	2					
4	54B–F7114–00	BUTEE, BEQUILLE CENTRALE STOPPER, MAIN STAND	1					
5	5DG–E4613–00	JOINT DE COUDE D'ECHAPPEMENT GASKET, EXHAUST PIPE	1					
6	95702–08500	ECROU, A COLLERETTE NUT, FLANGE	3					
7	95812–08045	BOULON BOLT, FLANGE	1					
8	90387–08836	COLLERETTE COLLAR	1					
9	B69–E4747–00	AMORTISSEUR DE POT D'ECHAPPT DAMPER, MUFFLER	2					
10	90201–08612	RONDELLE, PLATE WASHER, PLATE	1					

SEACUBE
ONE-STOP PARTS SOLUTION

FIG. 9 CARTER — CRANKCASE

REF. N°	N° PIECES PART NO.	DESCRIPTION DESCRIPTION	BY11					REMARQUES REMARKS
1	B69–E5111–00	CARTER DE MOTEUR CRANKCASE 1	1					
2	B44–WE512–00	CARTER DE MOTEUR CRANKCASE 2	1					
3	91830–21014	RIVET PIN, DOWEL	2					
4	95022–06055	BOULON, A COLLERETTE BOLT, FLANGE	2					
5	95022–06045	BOULON, A COLLERETTE BOLT, FLANGE	9					

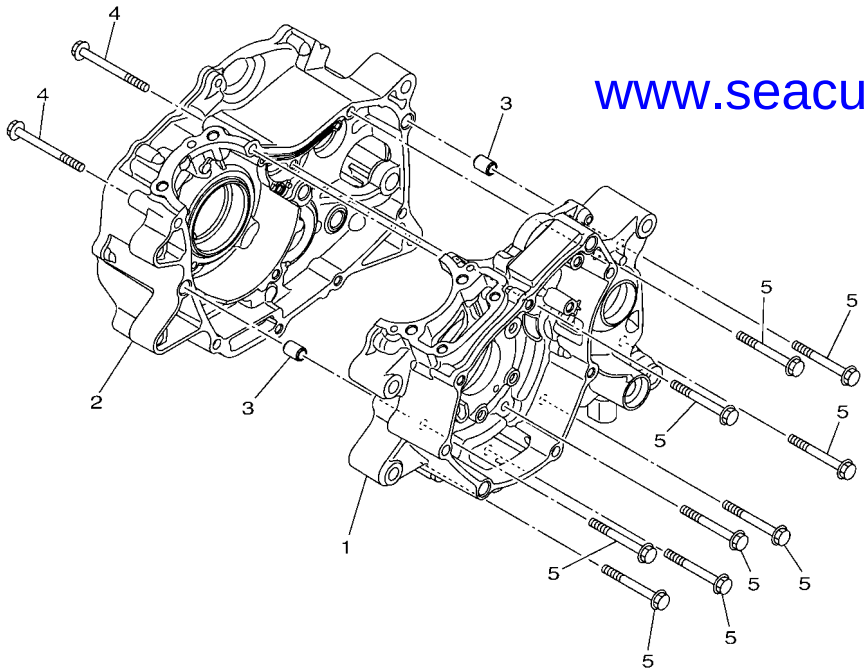

www.seacubemoto.com

B441470-R090

SEACUBE
ONE-STOP PARTS SOLUTION

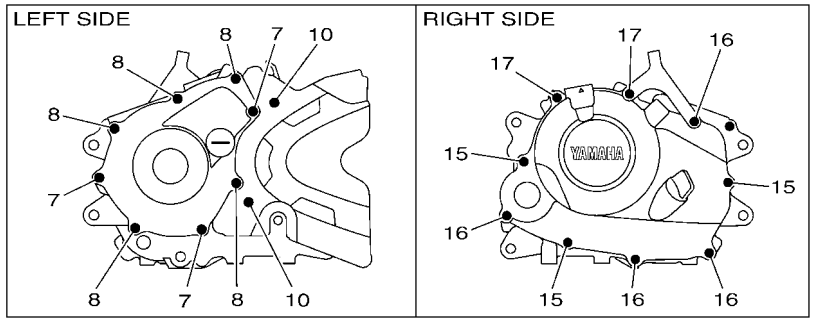

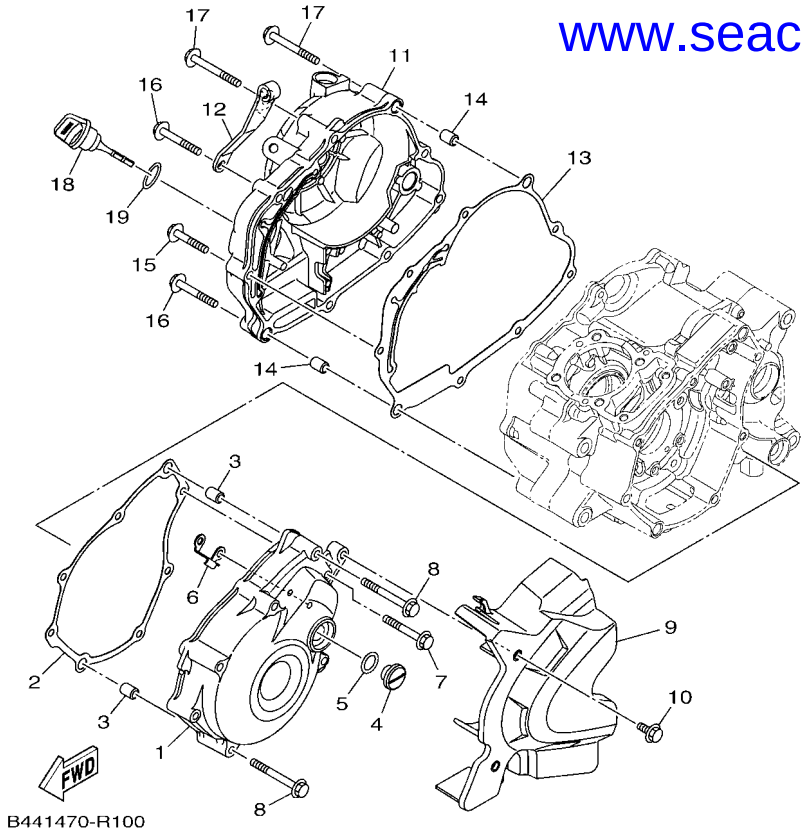

www.seacubemoto.com

FIG. 10 COUVERCLE DE CARTER 1 — CRANKCASE COVER 1

REF. N°	N° PIECES PART NO.	DESCRIPTION DESCRIPTION	BY11					REMARQUES REMARKS
1	B44–E5411–00	COUVERCLE 1, CARTER MOTEUR COVER, CRANKCASE 1	1					
2	B44–E5451–00	JOINT, COUVERCLE DE CARTER 1 GASKET, CRANKCASE COVER 1	1					
3	91830–21014	RIVET PIN, DOWEL	2					
4	90340–14117	PLOT, FILETE DROIT PLUG, STRAIGHT SCREW	1					
5	93210–14812	JOINT TORIQUE O-RING	1					
6	21C–E5113–00	PLAQUE PLATE	1					
7	95022–06045	BOULON, A COLLERETTE BOLT, FLANGE	3					
8	95022–06055	BOULON, A COLLERETTE BOLT, FLANGE	5					
9	B44–E5418–00	COUVERCLE, CARTER DE CHAINE COVER, CHAIN CASE	1					
10	95802–06016	BOULON XZ550-82 BOLT, FLANGE	2					
11	B44–E5421–10	COUVERCLE 2, CARTER MOTEUR COVER, CRANKCASE 2	1					
12	B44–E5441–10	SUPPORT, CABLE D'EMBRAYAGE HOLDER, CLUTCH CABLE	1					
13	B44–E5461–00	JOINT, COUVERCLE DE CARTER 2 GASKET, CRANKCASE COVER 2	1					
14	91830–21014	RIVET PIN, DOWEL	2					
15	95022–06035	BOULON, A COLLERETTE BOLT, FLANGE	3					
16	95022–06045	BOULON, A COLLERETTE BOLT, FLANGE	4					
17	95022–06055	BOULON, A COLLERETTE BOLT, FLANGE	2					
18	54B–E5362–00	PLOT, NIVEAU D'HUILE PLUG, OIL LEVEL	1					
19	93210–19809	JOINT TORIQUE O-RING	1					

SEACUBE
ONE-STOP PARTS SOLUTION

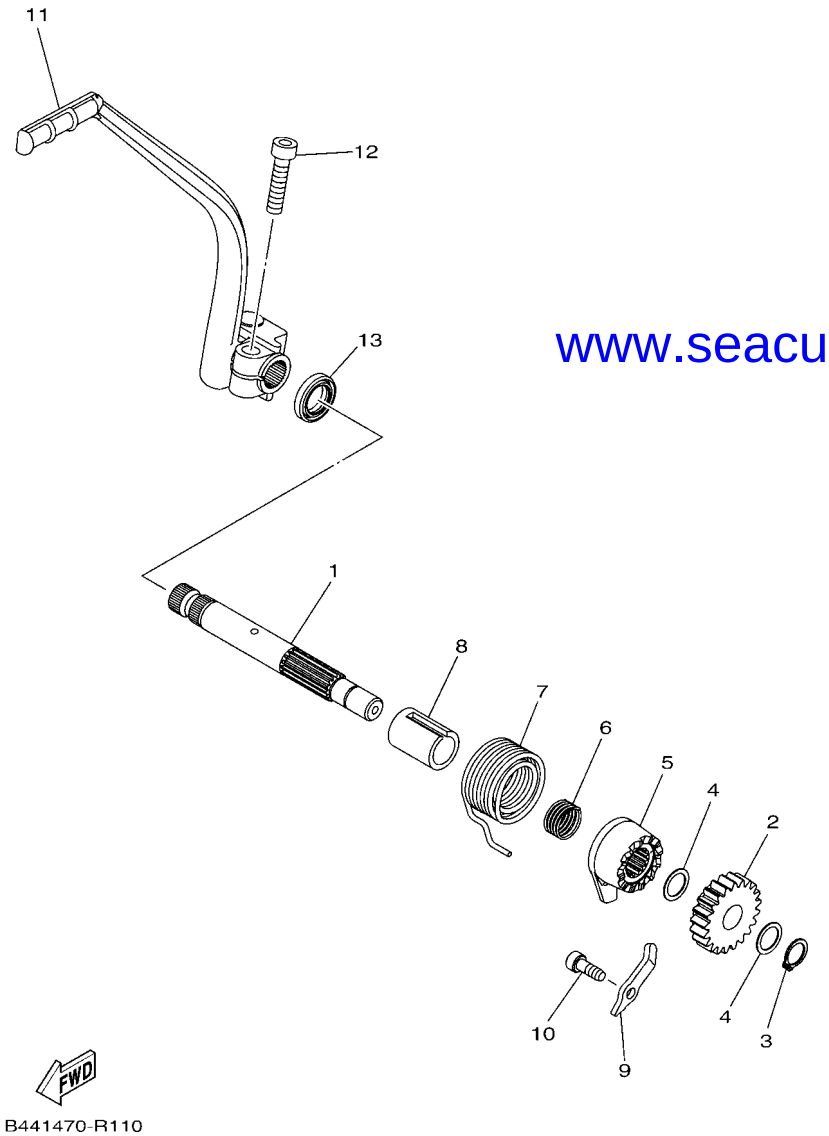

FIG. 11 DEMARREUR — STARTER

REF. N°	N° PIECES PART NO.	DESCRIPTION DESCRIPTION	BY11					REMARQUES REMARKS
1	B44–E5661–00	AXE, KICK AXLE, KICK	1					
2	B44–E5641–00	PIGNON DE KICK GEAR, KICK	1					
3	99009–13400	CIRCLIP CIRCLIP	1					
4	90201–13803	RONDELLE, PLATE WASHER, PLATE	2					
5	B44–E5671–00	ROUE;, A CLIQUET WHEEL, RATCHET	1					
6	B44–E5767–00	RESSORT SPRING	1					
7	B44–E5665–00	RESSORT, KICK SPRING, KICK	1					
8	B44–E5664–00	GUIDE, RESSORT GUIDE, SPRING	1					
9	B44–E5674–00	GUIDE, ROUE A CLIQUET GUIDE, RATCHET WHEEL	1					
10	91312–06016	BOULON BOLT	1					
11	B44–E5620–00	PEDALE DE KICK KICK CRANK ASSY	1					
12	91312–08030	BOULON BOLT	1					
13	93102–16800	JOINT SPY OIL SEAL	1					

www.seacubemoto.com

SEACUBE
ONE-STOP PARTS SOLUTION

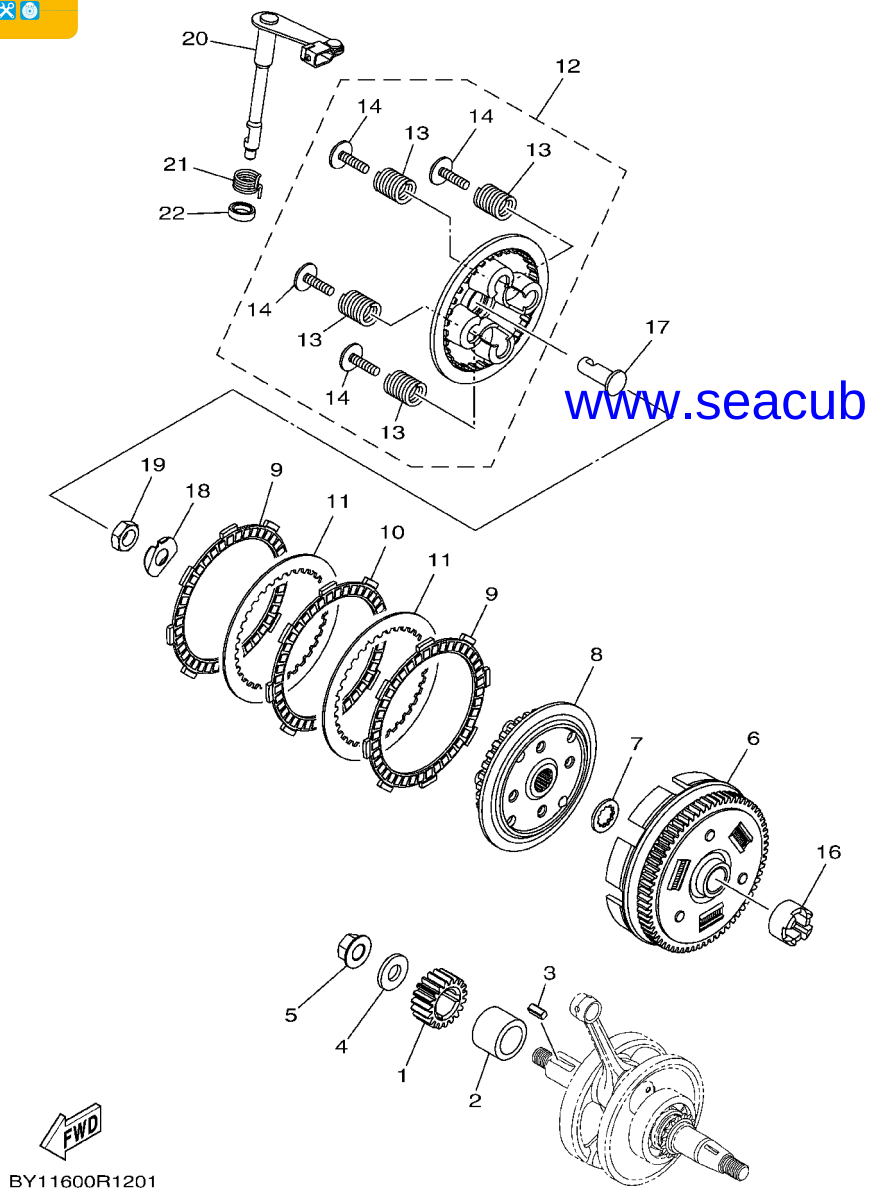

www.seacubemoto.com

FIG. 12 EMBRAYAGE — CLUTCH

REF. N°	N° PIECES PART NO.	DESCRIPTION DESCRIPTION	BY11					REMARQUES REMARKS
1	B44–E6111–00	PIGNON D'ENTRAINEMT PRIMAIRE GEAR, PRIMARY DRIVE	1					
2	90387–20815	COLLERETTE COLLAR	1					
3	90282–05005	CLAVETTE, DROITE KEY, STRAIGHT	1					
4	90201–122H1	RONDELLE, PLATE WASHER, PLATE	1					
5	95702–12500	ECROU, A COLLERETTE NUT, FLANGE	1					
6	B44–E6150–00	CLOCHE D'EMBRAYAGE CPLTE PRIMARY DRIVEN GEAR COMP.	1					
7	B44–E6154–10	PLAQUE, BUTEE 1 PLATE, THRUST 1	1					
8	B44–E6371–10	MOYEU D'EMBRAYAGE BOSS, CLUTCH	1					
9	B44–E6321–00	DISQUE, FRICTION PLATE, FRICTION	2					
10	B44–E6331–00	DISQUE 2, FRICTION PLATE, FRICTION 2	1					
11	B44–E6324–00	DISQUE 1, EMBRAYAGE PLATE, CLUTCH 1	2					
12	B44–WE635–00	DISQUE DE PRESSION 1 COMP. PRESSURE PLATE COMP. 1	1					
13	B44–E6333–20	.RESSORT 1, EMBRAYAGE .SPRING, CLUTCH 1	4					
14	B44–E6337–20	.VIS, RESSORT .SCREW, SPRING	4					
16	B44–E6156–00	COLLERETTE COLLAR	1					
17	B44–E6356–30	TIGE DE DEBRAYAGE ROD, PUSH 1	1					
18	90215–12815	RONDELLE-FREIN WASHER, LOCK	1					
19	90170–12060	ECROU NUT	1					
20	B44–E6380–20	LEVIER DE DEBRAYAGE PUSH LEVER ASSY	1					
21	B44–E6345–00	RESSORT, RAPPEL SPRING, RETURN	1					
22	93102–12877	JOINT SPY OIL SEAL	1					

SEACUBE
ONE-STOP PARTS SOLUTION

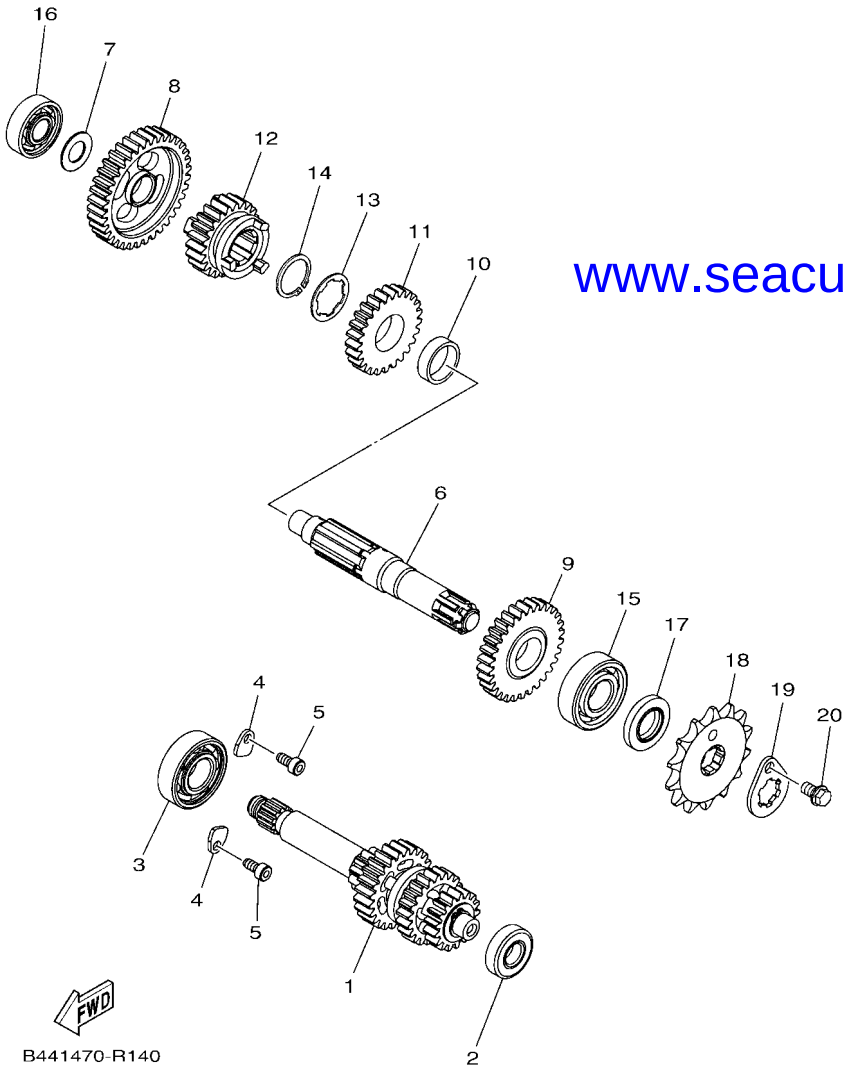

www.seacubemoto.com

FIG. 13 TRANSMISSION

REF. N°	N° PIECES PART NO.	DESCRIPTION DESCRIPTION	BY11					REMARQUES REMARKS
1	B44–E7410–01	ARBRE, PRIMAIRE COMPLET MAIN AXLE COMP. (17T/21T/24T)	1					
2	93306–001YH	ROULEMENT BEARING	1					
3	93306–253YG	ROULEMENT BEARING	1					
4	B44–E7471–00	PLAQUE, COUVERCLE PLATE, COVER	2					
5	91312–05010	BOULON BOLT	2					
6	B44–E7421–00	ARBRE, SECONDAIRE AXLE, DRIVE	1					
7	90201–127E1	RONDELLE, PLATE WASHER, PLATE	1					
8	B44–E7211–00	1ERE PIGNON SECONDAIRE (36D) GEAR, 1ST WHEEL (36T)	1					
9	B44–E7221–00	2EME PIGNON SECONDAIRE (30D) GEAR, 2ND WHEEL (30T)	1					
10	B44–E7442–00	COLLIER D'ENTRETOISE COLLAR, DISTANCE	1					
11	B44–E7231–00	3EME PIGNON SECONDAIRE (25D) GEAR, 3RD WHEEL (25T)	1					
12	B44–E7241–00	4EME PIGNON SECONDAIRE (22D) GEAR, 4TH WHEEL (22T)	1					
13	90209–17285	RONDELLE WASHER	1					
14	93410–20809	CLIPS CIRCLIP	1					
15	93306–253YF	ROULEMENT BEARING	1					
16	93306–201Y4	ROULEMENT BEARING	1					
17	93102–17815	JOINT SPY OIL SEAL	1					
18	93816–14831	PIGNON SORTIE DE B.V. (14D) SPROCKET, DRIVE (14T)	1					
19	B44–E7456–00	SUPPORT DE PIGNON S.B.V. HOLDER, SPROCKET	1					
20	95022–06010	BOULON, A COLLERETTE BOLT, FLANGE	1					

SEACUBE
ONE-STOP PARTS SOLUTION

FIG. 14 BARILLET & FOURCHETTE — SHIFT CAM & FORK

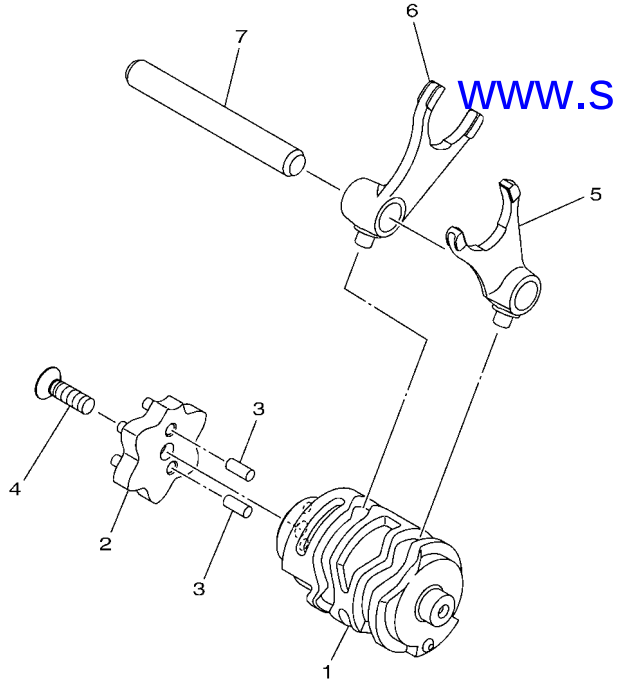

B441470-R150

www.seacubemoto.com

REF. N°	N° PIECES PART NO.	DESCRIPTION DESCRIPTION	BY11					REMARQUES REMARKS
1	B44–E8540–00	BARILLET COMPLET SHIFT CAM ASSY	1					
2	4LS–E8185–00	SEGMENT SEGMENT	1					
3	93604–10011	CLAVETTE PIN, DOWEL	2					
4	90149–06085	VIS SCREW	1					
5	B44–E8511–00	FOURCHETTE 1 FORK, SHIFT 1	1					
6	B44–E8512–00	FOURCHETTE 2 FORK, SHIFT 2	1					
7	B44–E8531–00	BARRE 1, GUIDE DE FOURCHETTE BAR, SHIFT FORK GUIDE 1	1					

SEACUBE
ONE-STOP PARTS SOLUTION

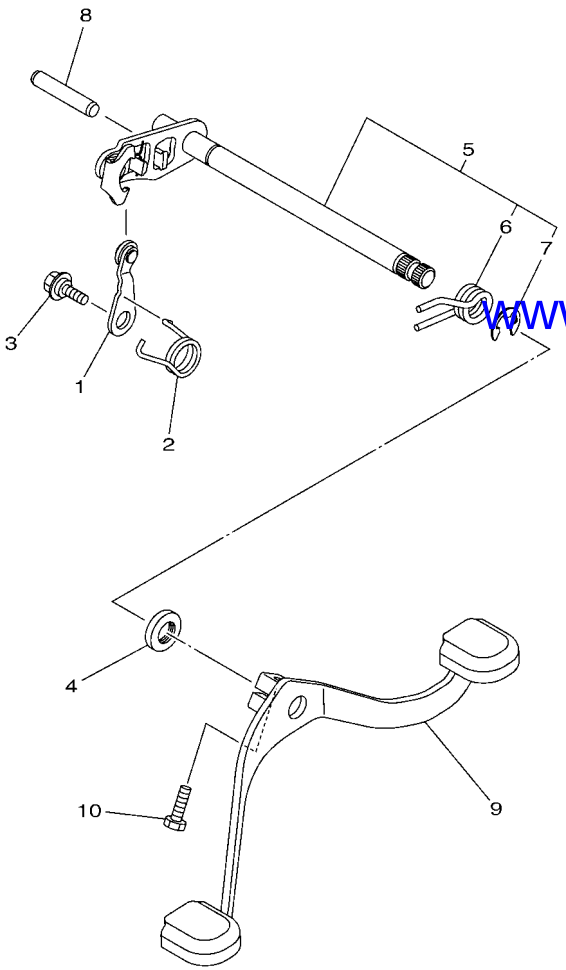

B441470-R160

FIG. 15 AXE DE SELECT & PEDALE — SHIFT SHAFT

REF. N°	N° PIECES PART NO.	DESCRIPTION DESCRIPTION	BY11					REMARQUES REMARKS
1	B44–E8140–00	LEVIER DE BUTEE STOPPER LEVER ASSY	1					
2	B44–E8144–00	CROCHET, RESSORT HANGER, SPRING	1					
3	90109–06193	BOULON BOLT	1					
4	93102–12809	JOINT SPY OIL SEAL	1					
5	21C–E8101–01	AXE DE SELECTEUR SHIFT SHAFT ASSY	1					
6	90508–32805	.RESSORT, TORSION .SPRING, TORSION	1					
7	99001–10600	.CIRCLIP .CIRCLIP	1					
8	93608–43238	AXE PIN, DOWEL	1					
9	B44–E8111–00	PEDALE, SELECTEUR PEDAL, SHIFT	1					
10	97012–06020	BOULON BOLT	1					

www.seacubemoto.com

SEACUBE
ONE-STOP PARTS SOLUTION

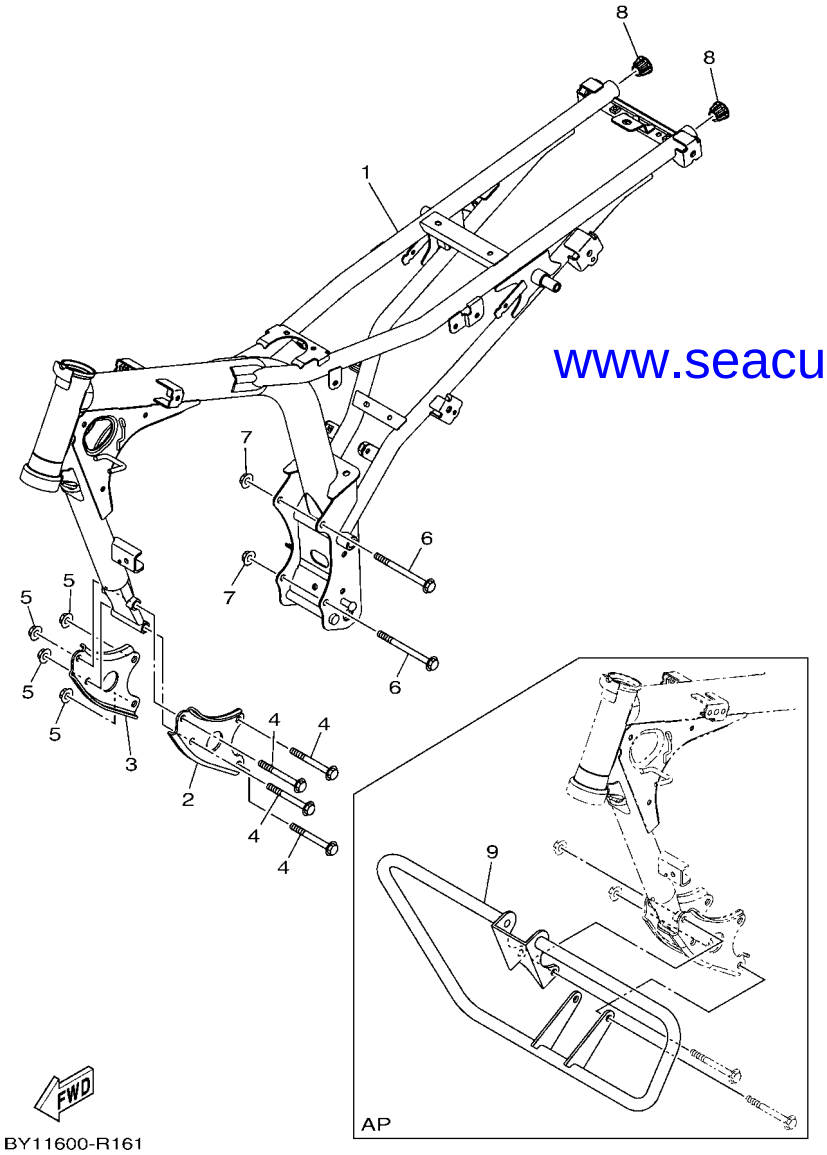

www.seacubemoto.com

FIG. 16 CADRE — FRAME

REF. N°	N° PIECES PART NO.	DESCRIPTION DESCRIPTION	BY11					REMARQUES REMARKS
1	B69–F1110–00	CADRE COMP. FRAME COMP.	1					
2	B44–F1315–00	SUPPORT 1, MOTEUR STAY, ENGINE 1	1					
3	B44–F1316–00	SUPPORT 2, MOTEUR STAY, ENGINE 2	1					
4	90105–088A6	BOULON BOLT, FLANGE	4					
5	95702–08500	ECROU, A COLLERETTE NUT, FLANGE	4					
6	90105–08007	BOULON BOLT, FLANGE	2					
7	95702–08500	ECROU, A COLLERETTE NUT, FLANGE	2					
8	B69–F1279–00	PLOT, BORGNE PLUG, BLIND	2					
9	B44–F8418–00	PROTECTEUR, MOTEUR 1 GUARD, ENGINE 1	1					AP AP

SEACUBE
ONE-STOP PARTS SOLUTION

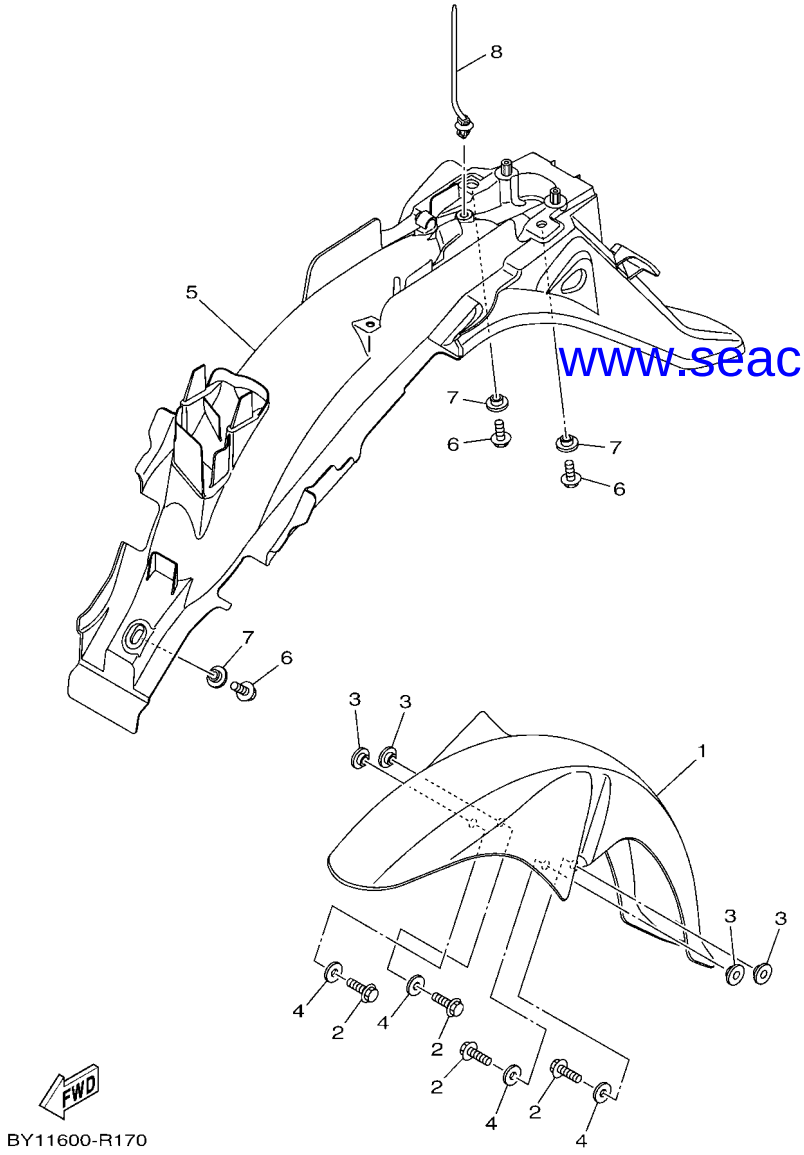

FIG. 17 PARE BOUE — FENDER

REF. N°	N° PIECES PART NO.	DESCRIPTION DESCRIPTION	BY11					REMARQUES REMARKS
1	B69–F1511–00	GARDE BOUE AV FENDER, FRONT	1					
2	95812–06016	BOULON BOLT, FLANGE	4					
3	90387–068S1	COLLERETTE COLLAR	4					
4	90201–06078	RONDELLE, PLATE WASHER, PLATE	4					
5	B69–F1611–00	GARDE BOUE AR FENDER, REAR	1					
6	95822–06012	BOULON BOLT, FLANGE	3					
7	90387–068S1	COLLERETTE COLLAR	3					
8	90464–36007	BRIDE CLAMP	1					

www.seacubemoto.com

SEACUBE
ONE-STOP PARTS SOLUTION

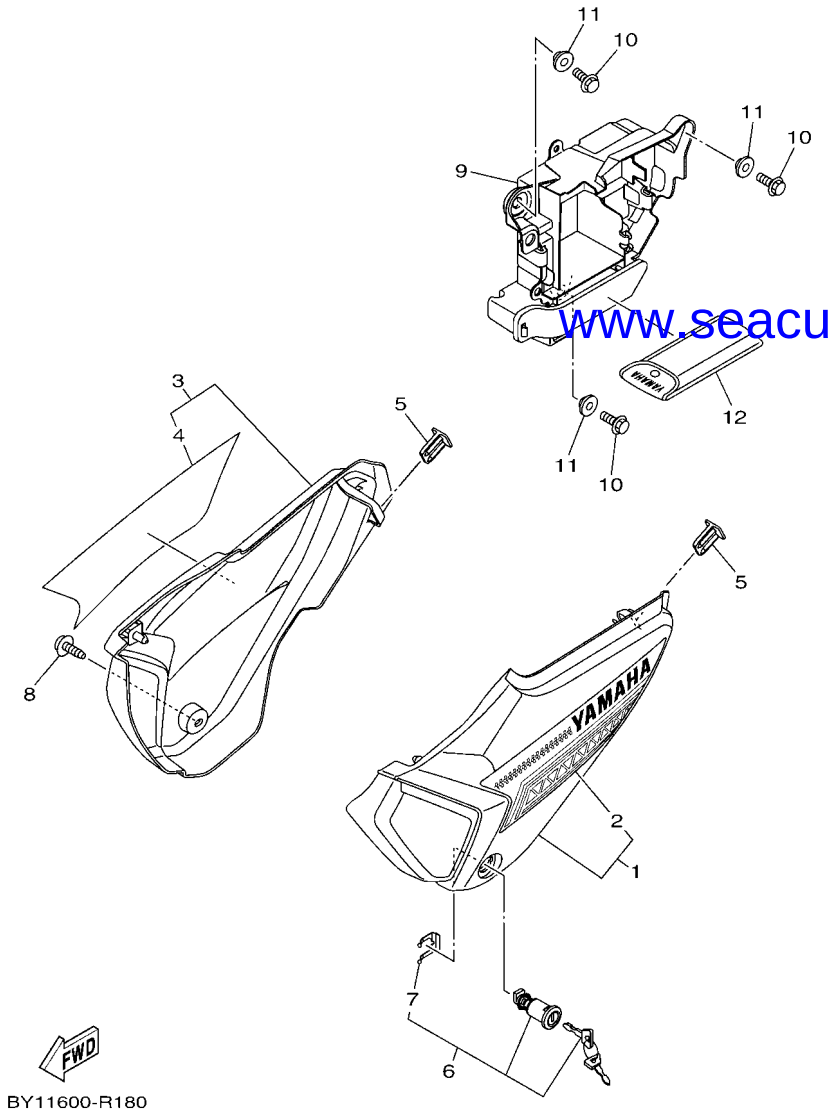

FIG. 18 COUVERCLE LATERAL — SIDE COVER

REF. N°	N° PIECES PART NO.	DESCRIPTION DESCRIPTION	BY11					REMARQUES REMARKS
1	B69–XF171–00	FRENCH COVER, SIDE 1	1					UR POUR SMX UR FOR SMX
	B69–XF171–10	FRENCH COVER, SIDE 1	1					UR POUR DRMK UR FOR DRMK
	B69–XF171–20	FRENCH COVER, SIDE 1	1					UR POUR CM6 UR FOR CM6
2	B69–F173E–01	.GRAPHIQUE, 1 .GRAPHIC 1	1					UR POUR SMX UR FOR SMX
	B69–F173E–11	.GRAPHIQUE, 1 .GRAPHIC 1	1					UR POUR DRMK UR FOR DRMK
	B69–F173E–21	.GRAPHIQUE, 1 .GRAPHIC 1	1					UR POUR CM6 UR FOR CM6
3	B69–XF172–00	CACHE LATERAL 2 COVER, SIDE 2	1					UR POUR SMX UR FOR SMX
	B69–XF172–10	CACHE LATERAL 2 COVER, SIDE 2	1					UR POUR DRMK UR FOR DRMK
	B69–XF172–20	CACHE LATERAL 2 COVER, SIDE 2	1					UR POUR CM6 UR FOR CM6
4	B69–F173F–01	.GRAPHIQUE 2 .GRAPHIC 2	1					UR POUR SMX UR FOR SMX
	B69–F173F–11	.GRAPHIQUE 2 .GRAPHIC 2	1					UR POUR DRMK UR FOR DRMK
	B69–F173F–21	.GRAPHIQUE 2 .GRAPHIC 2	1					UR POUR CM6 UR FOR CM6
5	5YY–F1778–00	AMORTISSEUR 1, POSITIONNEMENT DAMPER, LOCATING 1	2					
6	B44–WF178–00	ANTIVOL COMPLET LOCK ASSY	1					
7	5KA–F176V–00	.GROWER, ANTIVOL 2 .SPRING, LOCK 2	1					
8	90159–06067	VIS, AVEC RONDELLE SCREW, WITH WASHER	1					
9	B69–F177G–00	BOITIER COMPLET BOX, BATTERY	1					
10	95812–06014	BOULON BOLT, FLANGE	3					
11	90387–06048	COLLERETTE COLLAR	3					
12	2LP–F8100–00	TROUSSE A OUTILS TOOL KIT	1					

www.seacubemoto.com

SEACUBE
ONE-STOP PARTS SOLUTION

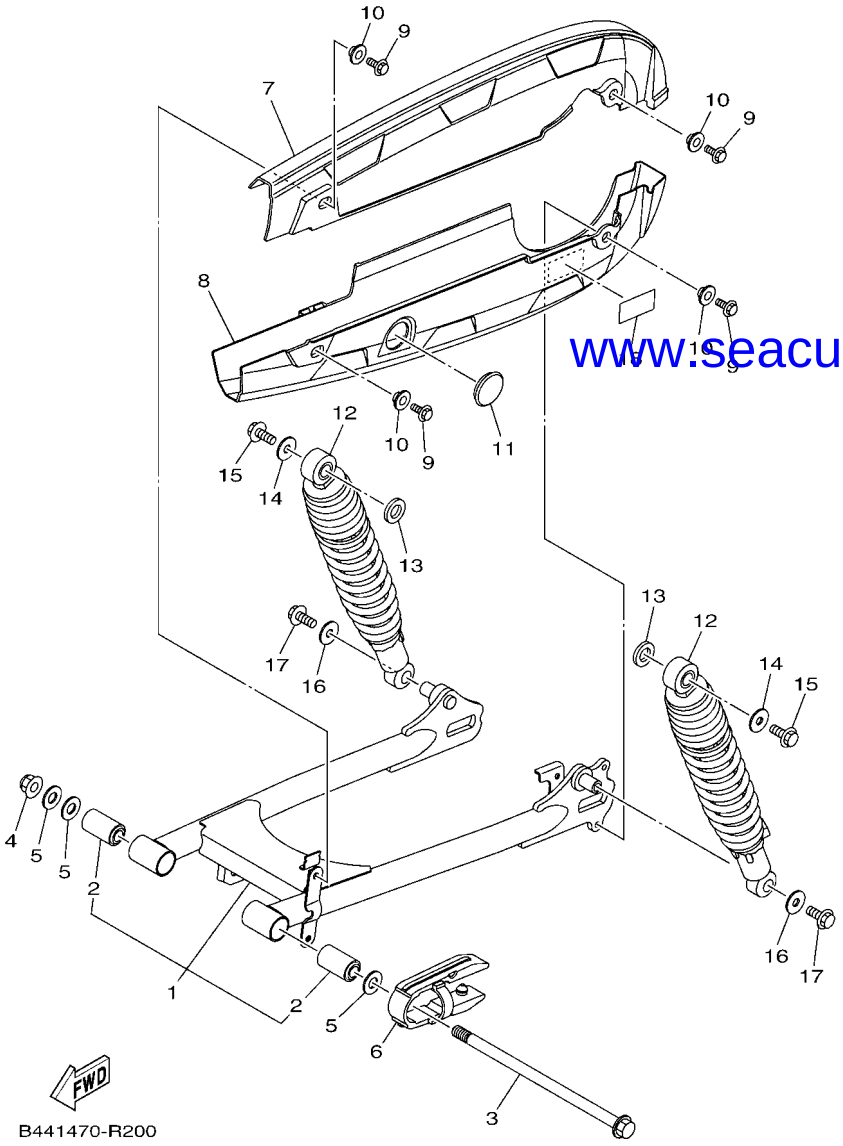

www.seacubemoto.com

FIG. 19 BRAS ARRIERE & SUSPENSION — REAR ARM & SUSPENSION

REF. N°	N° PIECES PART NO.	DESCRIPTION DESCRIPTION	BY11					REMARQUES REMARKS
1	B44–WF211–00	BRAS ARRIERE COMPLET REAR ARM COMP.	1					
2	90388–10806	.AMORTISSEUR CAOUCHOUC .DAMPER	2					
3	B44–F2141–00	AXE, PIVOT SHAFT, PIVOT	1					
4	95602–12200	ECROU, AUTO-BLOCANT NUT, SELF-LOCKING	1					
5	90201–12045	RONDELLE, PLATE WASHER, PLATE	3					
6	4LS–F2151–00	JOINT, PROTECTEUR SEAL, GUARD	1					
7	B44–F2311–00	CARTER, CHAINE CASE, CHAIN	1					
8	B44–F2312–00	CARTER, CHAINE 2 CASE, CHAIN 2	1					
9	95822–06012	BOULON BOLT, FLANGE	4					
10	90387–068S1	COLLERETTE COLLAR	4					
11	5TS–F2315–00	COUVERCLE CAP	1					
12	B44–F2210–10	AMORTISSEUR, ARRIERE SHOCK ABSORBER ASSY, REAR	2					
13	90201–15834	RONDELLE, PLATE WASHER, PLATE	2					
14	90201–081R9	RONDELLE, PLATE WASHER, PLATE	2					
15	95822–08014	BOULON BOLT, FLANGE	2					
16	90201–081R9	RONDELLE, PLATE WASHER, PLATE	2					
17	95822–08014	BOULON BOLT, FLANGE	2					
18	B44–F1668–00	ETIQUETTE, PNEU LABEL, TIRE	1					

SEACUBE
ONE-STOP PARTS SOLUTION

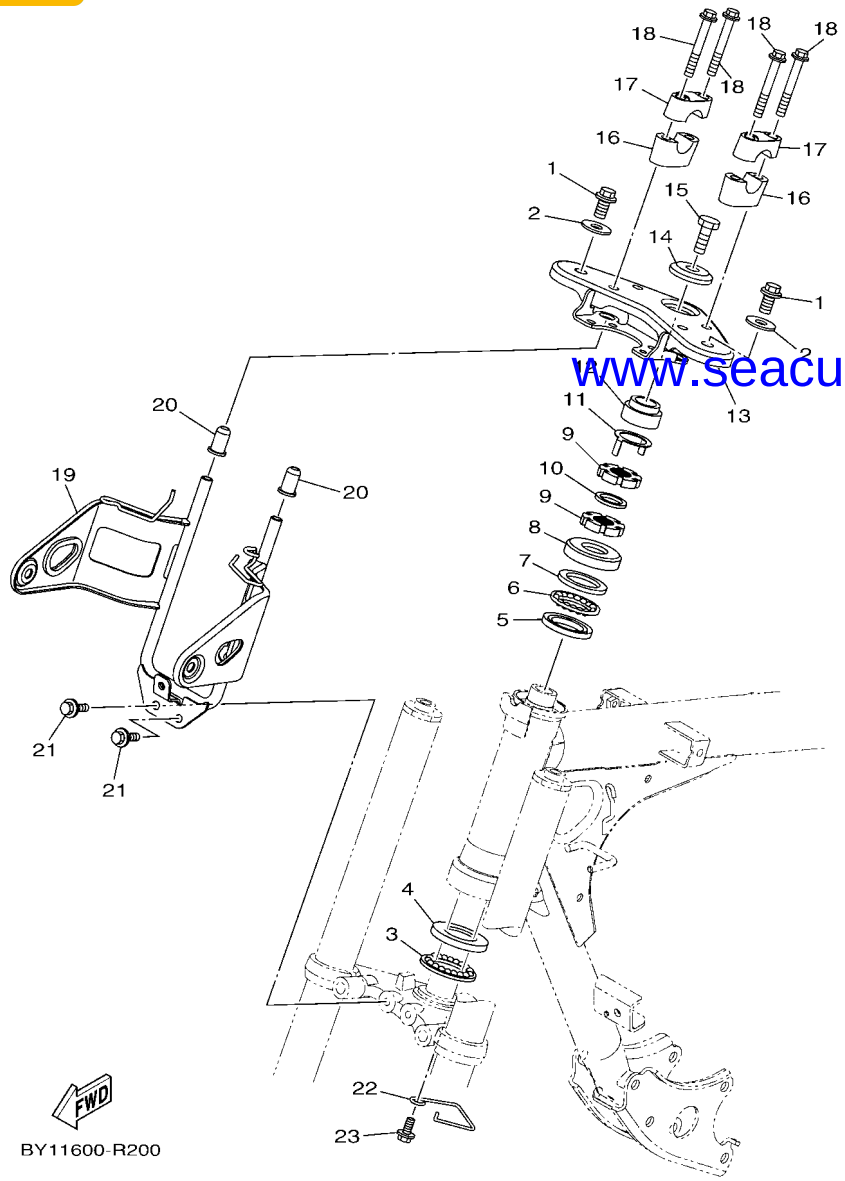

www.seacubemoto.com

FIG. 20 DIRECTION — STEERING

REF. N°	N° PIECES PART NO.	DESCRIPTION DESCRIPTION	BY11					REMARQUES REMARKS
1	95022–10014	BOULON, A COLLERETTE BOLT, FLANGE	2					
2	90201–10065	RONDELLE, PLATE WASHER, PLATE	2					
3	4LS–F341E–10	BUTTE DE ROULEMENT RETAINER, BALL BEARING	1					
4	5KA–F3412–00	BAGUE 2, A BILLES RACE, BALL 2	1					
5	5KA–F3414–00	BAGUE 4, A BILLES RACE, BALL 4	1					
6	4LS–F341E–00	BUTTE DE ROULEMENT RETAINER, BALL BEARING	1					
7	5KA–F3413–00	BAGUE 3, A BILLES RACE, BALL 3	1					
8	5YY–F3416–00	COUVERCLE, BAGUE A BILLES 2 COVER, BALL RACE 2	1					
9	90179–25002	ECROU NUT	2					
10	90202–26142	RONDELLE, PLATE WASHER, PLATE	1					
11	4LS–F3418–10	RONDELLE, SPECIALE WASHER, SPECIAL	1					
12	5KA–F3448–10	ENTRETOISE SPACER	1					
13	B69–F3435–00	TE DE FOURCHE SUPERIEUR CROWN, HANDLE	1					
14	54B–F3427–00	RONDELLE WASHER	1					
15	90101–10802	BOULON BOLT	1					
16	B44–F3442–00	SUPPORT, INFERIEUR DE GUIDON HOLDER, HANDLE LOWER	2					
17	B44–F3441–00	SUPPORT, SUPERIEUR DE GUIDON HOLDER, HANDLE UPPER	2					
18	95022–08055	BOULON, A COLLERETTE BOLT, FLANGE	4					
19	B69–F3174–00	SUPPORT, PHARE STAY, HEADLIGHT	1					
20	4LS–F317J–00	AMORTISSEUR 1 DAMPER 1	2					
21	95822–06012	BOULON BOLT, FLANGE	2					
22	2LP–F3389–00	GUIDE DE CABLE GUIDE, CABLE	1					
23	90159–06844	VIS, AVEC RONDELLE SCREW, WITH WASHER	1					

SEACUBE
ONE-STOP PARTS SOLUTION

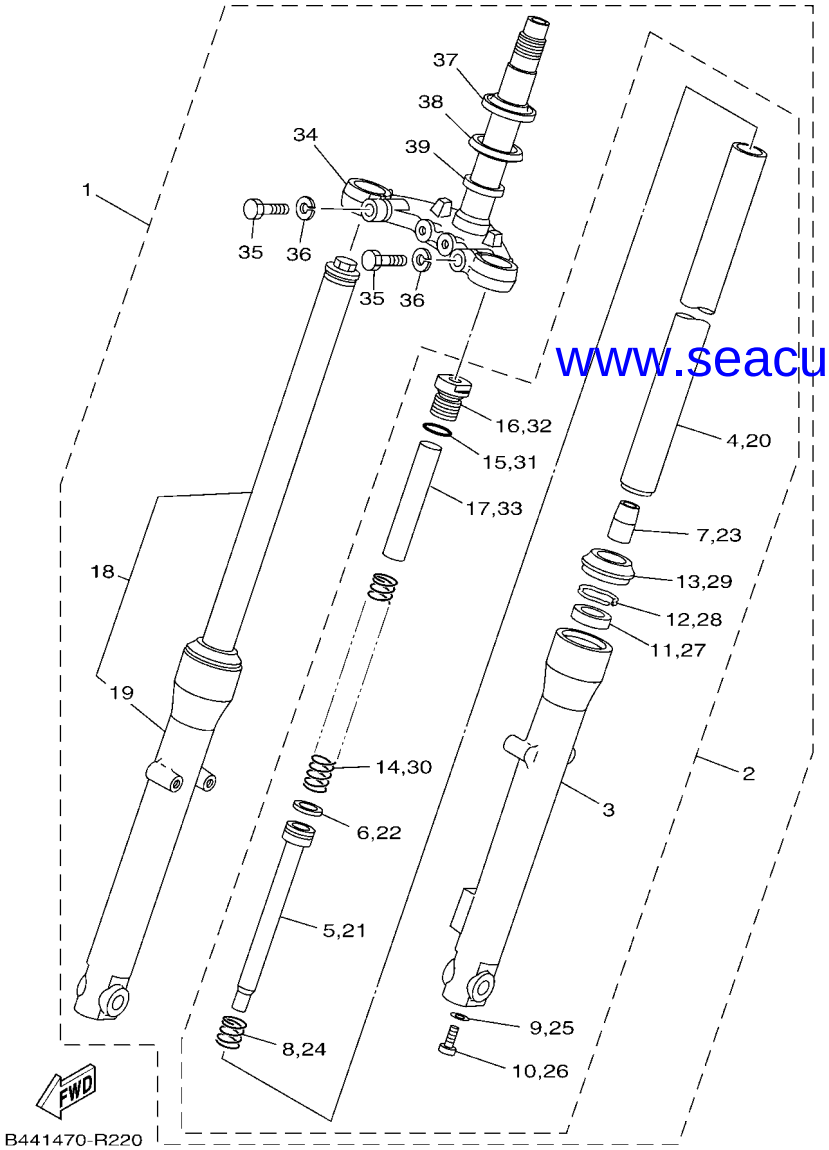

www.seacubemoto.com

FIG. 21 FOURCHE AVANT — FRONT FORK

REF. N°	N° PIECES PART NO.	DESCRIPTION DESCRIPTION	BY11					REMARQUES REMARKS
1	B44–F3100–10	FOURCHE AVANT COMPLETE FRONT FORK ASSY	1					
2	B44–F3102–00	.FOURCHE AVANT COMPLETE (G) .FRONT FORK ASSY (L.H)	1					
3	B44–F3126–00	..BAS DE FOURCHE(GAUCHE) ..TUBE, OUTER (L.H)	1					
4	5TS–F3110–50	..TUBE DE FOURCHE NU ..INNER TUBE COMP.1	1					
5	2LP–F3170–00	..CYLINDRE DE FOURCHE AV ..CYLINDER COMP., FRONT FORK	1					
6	35B–F3157–00	..SEGMENT ..RING, PISTON	1					
7	35B–F3173–00	..BROCHE, CONIQUE ..SPINDLE, TAPER	1					
8	35B–F3151–00	..RESSORT, REBONDISSEMENT ..SPRING, REBOUND	1					
9	35B–F3158–00	..JOINT ..GASKET	1					
10	35B–F3181–00	..BOULON, TETE HEXAGONALE CREUSE ..BOLT, HEXAGON SOCKET HEAD	1					
11	35B–F3145–00	..JOINT SPY ..OIL SEAL	1					
12	35B–F3156–00	..JONC, ARRET ..RING, SNAP	1					
13	35B–F3144–00	..JOINT, ANTI-POUSSIERE ..SEAL, DUST	1					
14	B44–F3141–00	..RESSORT, FOURCHE AVANT ..SPRING, FRONT FORK	1					
15	35B–F3114–00	..JOINT ..GASKET	1					
16	5TS–F3154–50	..PLOT, TUBE INTERNE ..CAP	1					
17	B44–F3118–00	..ENTRETOISE ..SPACER	1					
18	B44–F3103–00	.FOURCHE AVANT COMPLETE (D) .FRONT FORK ASSY (R.H)	1					
19	B44–F3136–00	..BAS DE FOURCHE 2 ..TUBE, OUTER 2	1					
20	5TS–F3110–50	..TUBE DE FOURCHE NU ..INNER TUBE COMP.1	1					
21	2LP–F3170–00	..CYLINDRE DE FOURCHE AV ..CYLINDER COMP., FRONT FORK	1					
22	35B–F3157–00	..SEGMENT ..RING, PISTON	1					
23	35B–F3173–00	..BROCHE, CONIQUE ..SPINDLE, TAPER	1					
24	35B–F3151–00	..RESSORT, REBONDISSEMENT ..SPRING, REBOUND	1					
25	35B–F3158–00	..JOINT ..GASKET	1					
26	35B–F3181–00	..BOULON, TETE HEXAGONALE CREUSE ..BOLT, HEXAGON SOCKET HEAD	1					
27	35B–F3145–00	..JOINT SPY ..OIL SEAL	1					

SEACUBE
ONE-STOP PARTS SOLUTION

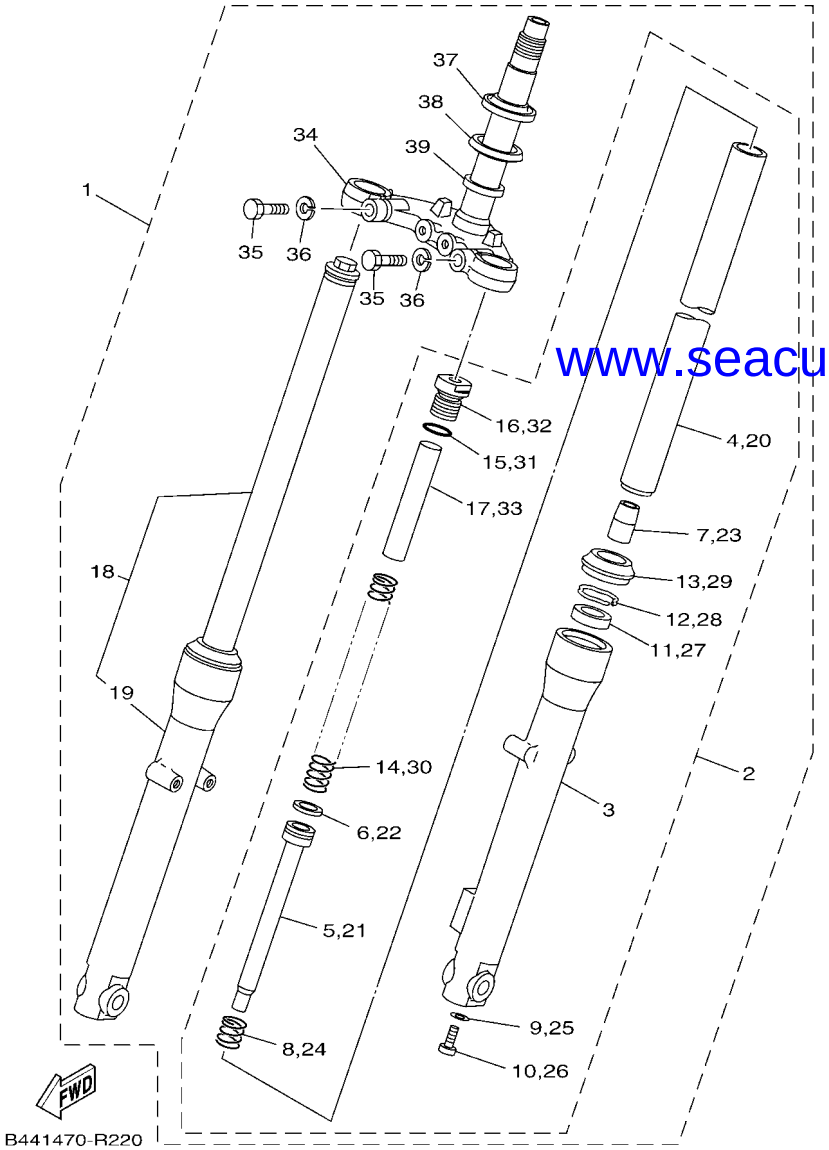

www.seacubemoto.com

FIG. 21 FOURCHE AVANT — FRONT FORK

REF. N°	N° PIECES PART NO.	DESCRIPTION DESCRIPTION	BY11					REMARQUES REMARKS
28	35B–F3156–00	..JONC, ARRET ..RING, SNAP	1					
29	35B–F3144–00	..JOINT, ANTI-POUSSIERE ..SEAL, DUST	1					
30	B44–F3141–00	..RESSORT, FOURCHE AVANT ..SPRING, FRONT FORK	1					
31	35B–F3114–00	..JOINT ..GASKET	1					
32	5TS–F3154–50	..PLOT, TUBE INTERNE ..CAP	1					
33	B44–F3118–00	..ENTRETOISE ..SPACER	1					
34	5TS–F3340–00	.TE DE FOURCHE INFERIEUR .UNDER BRACKET COMP.	1					
35	35B–F3346–00	.BOULON 1 .BOLT 1	2					
36	35B–F3159–00	.RONDELLE DE RESSORT .WASHER, SPRING, LOWER	2					
37	5KA–F3411–00	.BAGUE 1, A BILLES .RACE, BALL 1	1					
38	5YY–F3462–00	.JOINT, ANTI POUSSIERE .SEAL, DUST	1					
39	35B–F3392–00	.RONDELLE, SPECIALE .WASHER, SPECIAL	1					

SEACUBE
ONE-STOP PARTS SOLUTION

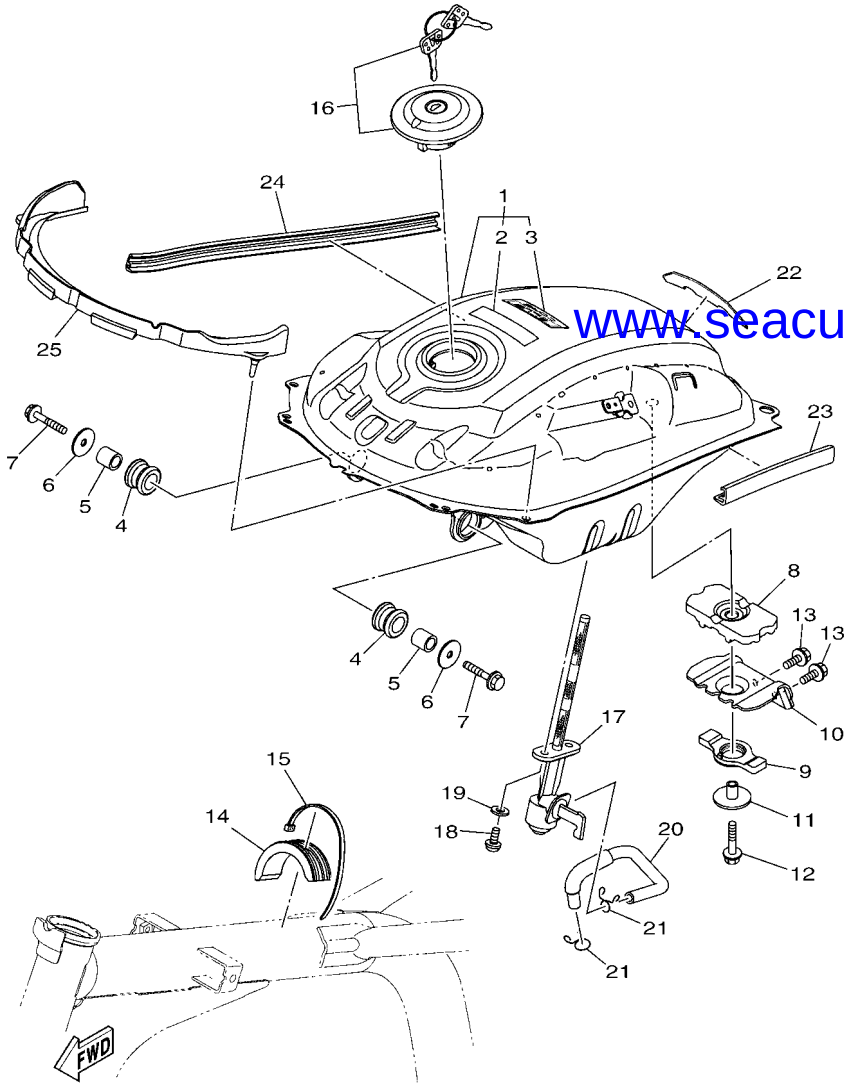

www.seacubemoto.com

FIG. 22 RESERVOIR A CARBURANT — FUEL TANK

REF. N°	N° PIECES PART NO.	DESCRIPTION DESCRIPTION	BY11					REMARQUES REMARKS
1	B69–WF410–00	RESERVOIR A ESSENCE FUEL TANK ASSY	1					
2	1DE–F1568–00	.ETIQUETTE, AVERTISSEMENT .LABEL, WARNING	1					
3	2GS–F4549–10	.EMBLEME .EMBLEM	1					
4	21C–F4181–00	SILENT-BLOC 1 DAMPER, LOCATING 1	2					
5	90387–107H6	COLLERETTE COLLAR	2					
6	90201–06086	RONDELLE, PLATE WASHER, PLATE	2					
7	95812–06035	BOULON BOLT, FLANGE	2					
8	2LP–F4182–00	SILENT-BLOC DAMPER, LOCATING 2	1					
9	2LP–F4183–00	SILENT-BLOC DAMPER, LOCATING 3	1					
10	2LP–F413Y–00	SUPPORT, MONTAGE DE RESERVOIR BRACKET, TANK FITTING	1					
11	90387–068H4	COLLERETTE COLLAR	1					
12	95822–06025	BOULON BOLT, FLANGE	1					
13	95812–06014	BOULON BOLT, FLANGE	2					
14	21C–F4183–00	SILENT-BLOC DAMPER, LOCATING 3	1					
15	B44–F4135–00	COLLIER 1 CLAMP 1	1					
16	5TS–WF461–30	BOUCHON DE RESERVOIR A ESSENCE CAP ASSY WITH LOCK	1					
17	B44–F4500–00	ROBINET A ESSENCE FUEL COCK ASSY 1	1					
18	90149–06108	VIS SCREW	2					
19	90202–05807	RONDELLE, PLATE WASHER, PLATE	2					
20	B44–F4311–01	DURITE A ESSENCE PIPE, FUEL 1	1					
21	90467–09006	JONC CLIP	2					
22	B44–F4141–00	PROTECTEUR, RESERV A ESSENCE PROTECTOR, FUEL TANK	1					
23	B44–F4188–00	MOULURE, RASERVOIR A ESSENCE MOLD, FUEL TANK	1					
24	B44–F4188–10	MOULURE, RASERVOIR A ESSENCE MOLD, FUEL TANK	1					
25	B44–F418B–00	MOULURE, RESERVOIR A ESSENCE 1 MOLE, FUEL TANK 1	1					

SEACUBE
ONE-STOP PARTS SOLUTION

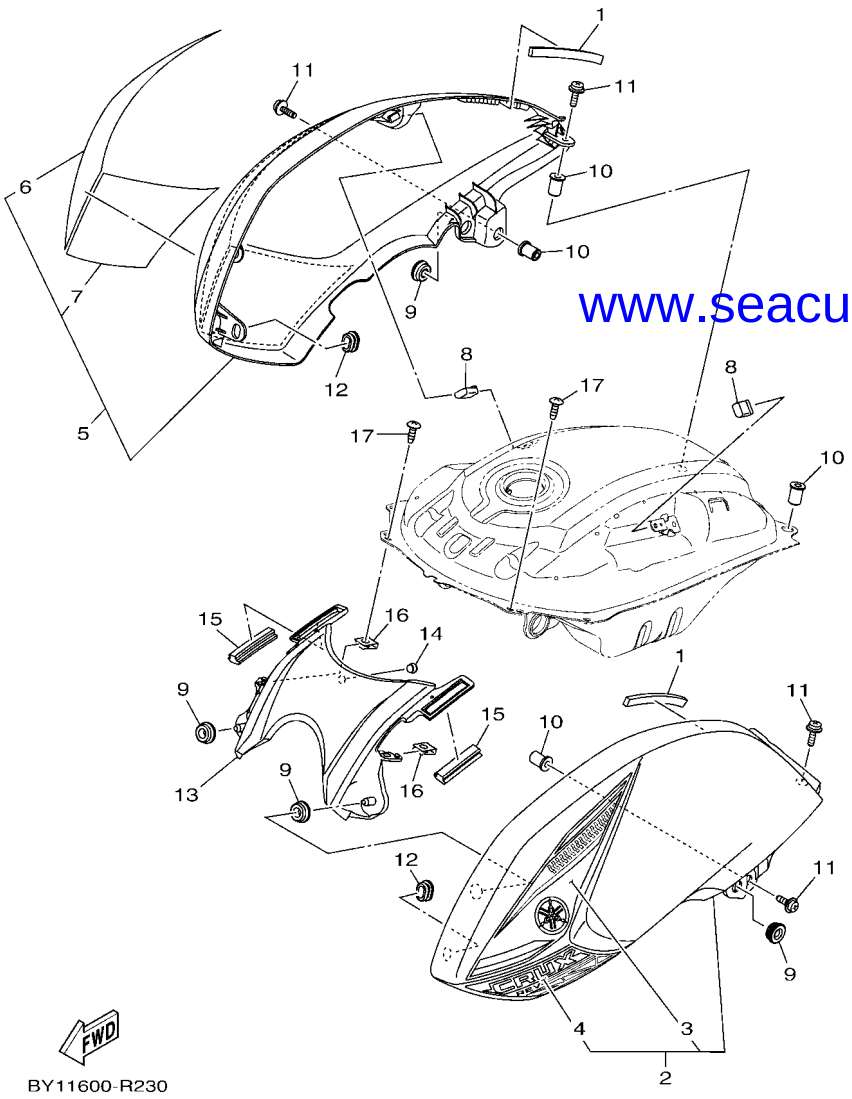

www.seacubemoto.com

FIG. 23 RESERVOIR A CARBURANT 2 — FUEL TANK 2

REF. N°	N° PIECES PART NO.	DESCRIPTION DESCRIPTION	BY11					REMARQUES REMARKS
1	B44–F414J–00	MOULURE, COUVERCLE DE PANNEAU DAMPER, PLATE 2	2					
2	B44–XF412–10–P0	CACHE LATERALE 1 TANK SIDE COVER 1	1					UR POUR SMX UR FOR SMX
	B44–XF412–10–P3	CACHE LATERALE 1 TANK SIDE COVER 1	1					UR POUR DRMK UR FOR DRMK
	B44–XF412–10–P4	CACHE LATERALE 1 TANK SIDE COVER 1	1					UR POUR CM6 UR FOR CM6
3	B69–F4244–00	.EMBLEME, RESERVOIR A ESSENCE .GRAPHIC, FUEL TANK 1	1					UR POUR SMX UR FOR SMX
	B69–F4244–10	.EMBLEME, RESERVOIR A ESSENCE .GRAPHIC, FUEL TANK 1	1					UR POUR DRMK UR FOR DRMK
	B69–F4244–20	.EMBLEME, RESERVOIR A ESSENCE .GRAPHIC, FUEL TANK 1	1					UR POUR CM6 UR FOR CM6
4	B69–F4246–00	.EMBLEME 3 .GRAPHIC 3	1					UR POUR SMX UR FOR SMX
	B69–F4246–10	.EMBLEME 3 .GRAPHIC 3	1					UR POUR DRMK UR FOR DRMK
	B69–F4246–20	.EMBLEME 3 .GRAPHIC 3	1					UR POUR CM6 UR FOR CM6
5	B44–XF413–10–P0	CACHE LATERALE 2 TANK SIDE COVER 2	1					UR POUR SMX UR FOR SMX
	B44–XF413–10–P3	CACHE LATERALE 2 TANK SIDE COVER 2	1					UR POUR DRMK UR FOR DRMK
	B44–XF413–10–P4	CACHE LATERALE 2 TANK SIDE COVER 2	1					UR POUR CM6 UR FOR CM6
6	B69–F4245–00	.EMBLEME, RESERVOIR A ESSENCE .GRAPHIC, FUEL TANK 2	1					UR POUR SMX UR FOR SMX
	B69–F4245–10	.EMBLEME, RESERVOIR A ESSENCE .GRAPHIC, FUEL TANK 2	1					UR POUR DRMK UR FOR DRMK
	B69–F4245–20	.EMBLEME, RESERVOIR A ESSENCE .GRAPHIC, FUEL TANK 2	1					UR POUR CM6 UR FOR CM6
7	B69–F4247–00	.EMBLEME .GRAPHIC	1					UR POUR SMX UR FOR SMX
	B69–F4247–10	.EMBLEME .GRAPHIC	1					UR POUR DRMK UR FOR DRMK
	B69–F4247–20	.EMBLEME .GRAPHIC	1					UR POUR CM6 UR FOR CM6
8	2LP–F411J–00	AMORTISSEUR DE CACHE LATERALE DAMPER, SIDE COVER	2					
9	90480–13398	PASSE-FIL GROMMET	4					
10	90179–06834	ECROU NUT	4					
11	90159–06067	VIS, AVEC RONDELLE SCREW, WITH WASHER	4					
12	90480–01817	PASSE-FIL GROMMET	2					
13	B44–F171A–00	COUVRE RESERVOIR COVER, TOP	1					
14	21C–F1717–00	AMORTISSEUR DAMPER	1					
15	B44–F414H–00	MOULURE, COUVERCLE DE PANNEAU DAMPER, PLATE 1	2					

SEACUBE
ONE-STOP PARTS SOLUTION

FIG. 23 RESERVOIR A CARBURANT 2 — FUEL TANK 2

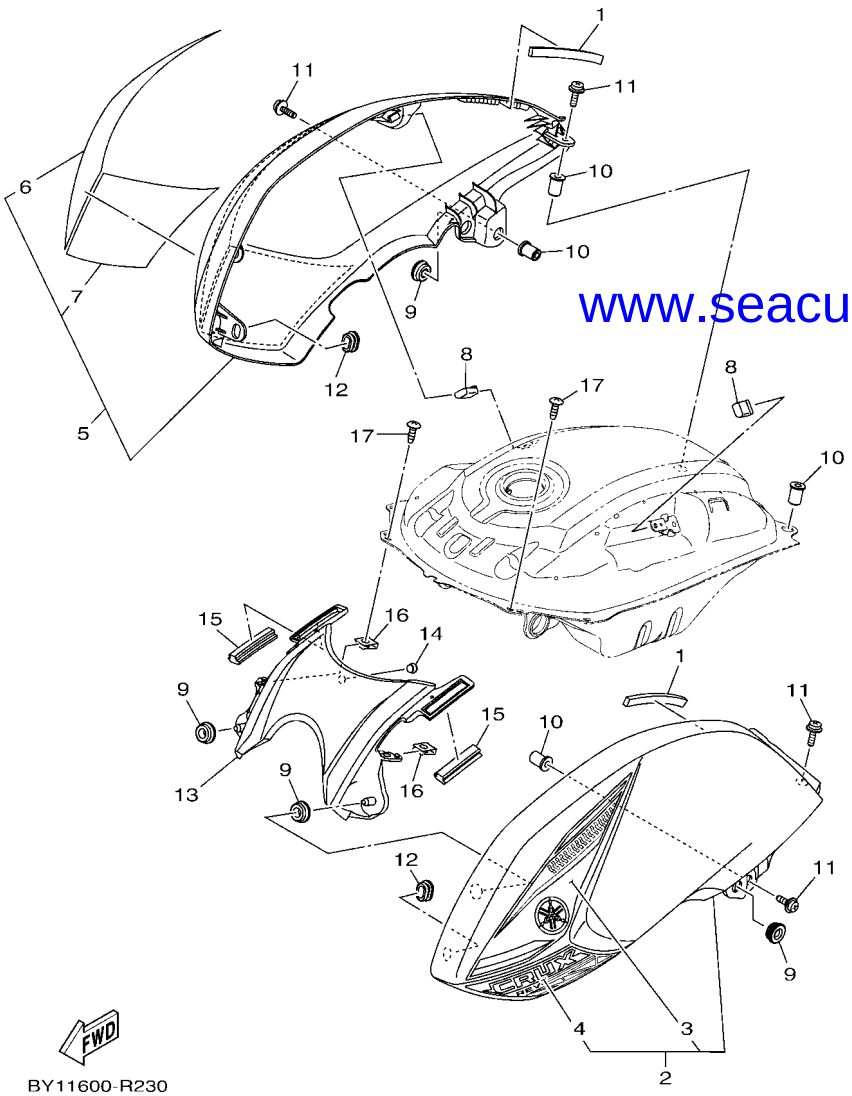

www.seacubemoto.com

REF. N°	N° PIECES PART NO.	DESCRIPTION DESCRIPTION	BY11					REMARQUES REMARKS
16	90183–05818	ECROU, RESSORT NUT, SPRING	2					
17	97707–50016	VIS, TETE FRAISEE SCREW, TRUSS HEAD TAPPING	2					

SEACUBE
ONE-STOP PARTS SOLUTION

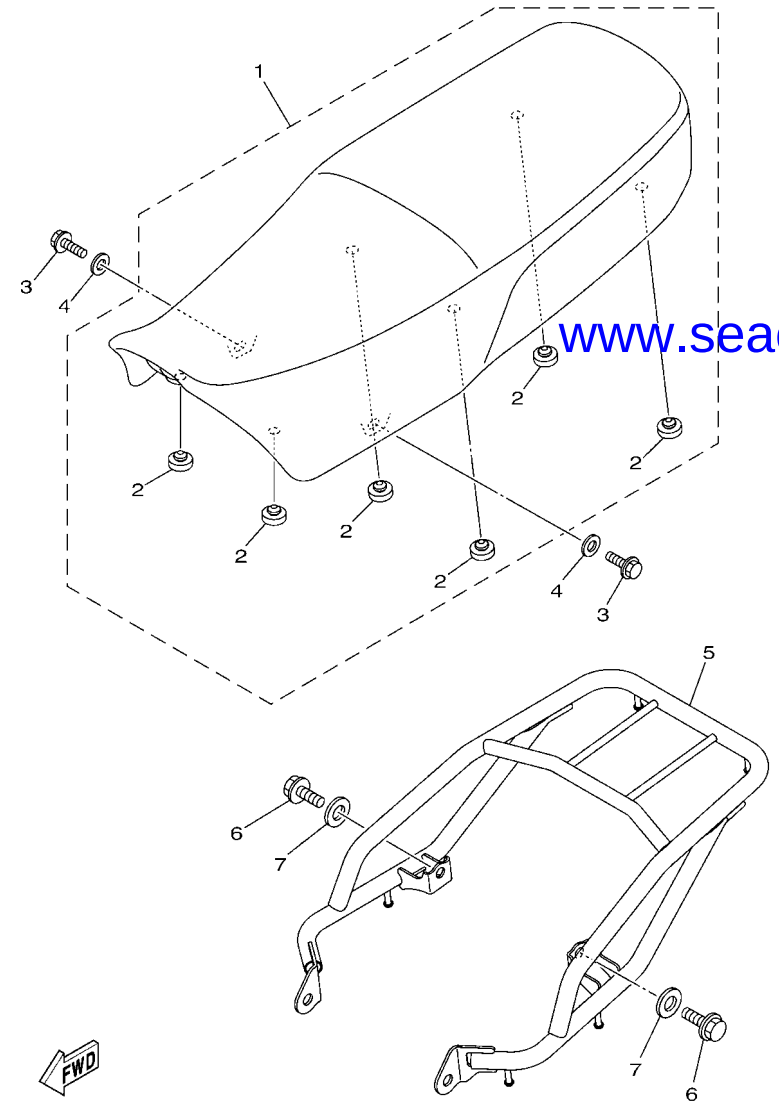

BY11600-R240

FIG. 24 SELLE — SEAT

REF. N°	N° PIECES PART NO.	DESCRIPTION DESCRIPTION	BY11					REMARQUES REMARKS
1	B69–F4730–00	SELLE BIPLACE DOUBLE SEAT ASSY	1					
2	4LS–F4741–00	.PASTILLE DE SELLE .PAD, SEAT	6					
3	95812–06014	BOULON BOLT, FLANGE	2					
4	90201–06078	RONDELLE, PLATE WASHER, PLATE	2					
5	B69–F4773–00	POIGNEE, SELLE HANDLE, SEAT	1					
6	95812–08016	BOULON BOLT, FLANGE	2					
7	92902–08200	RONDELLE WASHER	2					

www.seacubemoto.com

SEACUBE
ONE-STOP PARTS SOLUTION

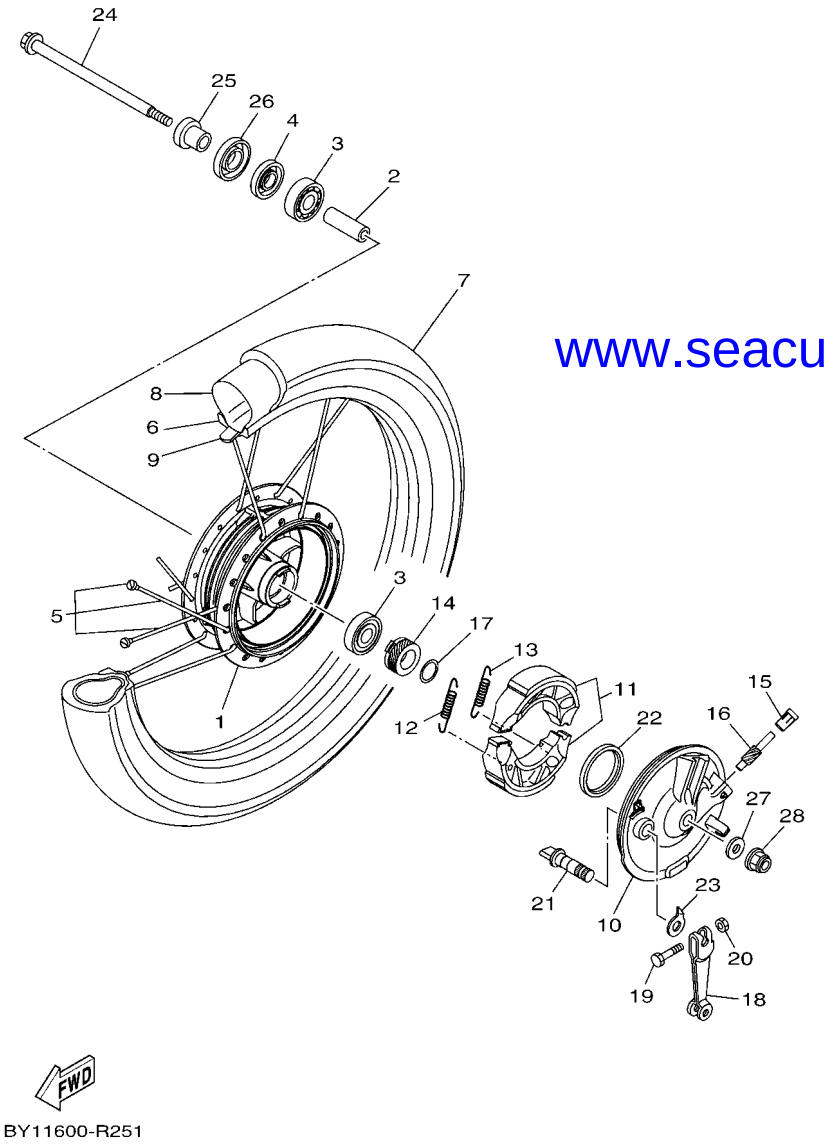

www.seacubemoto.com

FIG. 25 ROUE AVANT — FRONT WHEEL

REF. N°	N° PIECES PART NO.	DESCRIPTION DESCRIPTION	BY11					REMARQUES REMARKS
1	B69–F5111–00	MOYEU, AVANT HUB, FRONT	1					
2	90560–12138	ENTRETOISE SPACER	1					
3	93306–301XN	ROULEMENT BEARING	2					
4	93102–18802	JOINT SPY OIL SEAL	1					
5	B69–F5304–00	JEU DE RAYONS, ARRIERE SPOKE SET, REAR	1					
6	B69–F5144–00	JANTE RIM	1					
7	94127–17815	PNEU (2.75-17 4PR) TIRE (2.75-17 4PR)	1					TVS TVS
8	94227–17807	CHAMBRE A AIR (2.75-17) TUBE (2.75-17)	1					TVS TVS
9	B69–F5100–00	FOND DE JANTE BAND, RIM	1					
10	B44–F5121–10	FLASQUE DE FREIN PLATE, BRAKE SHOE	1					
11	2LP–WF53E–00	KIT DE MACHOIRE DE FREIN BRAKE SHOE KIT	1					
12	90506–12001	RESSORT, TENSION SPRING, TENSION	1					
13	90506–15001	RESSORT, TENSION SPRING, TENSION	1					
14	B44–F5135–00	PIGNON D'ENTRAINEMENT GEAR, DRIVE	1					
15	B44–F5136–00	BAGUE BUSH	1					
16	B44–F5138–00	PIGNON DE COMPTEUR GEAR, METER	1					
17	90201–20801	RONDELLE, PLATE WASHER, PLATE	1					
18	5TS–F5155–00	LEVIER, AXE A CAME LEVER, CAMSHAFT 1	1					
19	90101–06814	BOULON BOLT	1					
20	95307–06600	ECROU NUT	1					
21	5YY–F5351–00	AXE A CAME CAMSHAFT	1					
22	93105–47801	JOINT SPY OIL SEAL	1					
23	36L–F513A–00	PLAQUE INDICATION PLATE, INDICATOR	1					
24	36L–F5181–00	AXE, ROUE AXLE, WHEEL	1					
25	90387–12864	COLLERETTE COLLAR	1					
26	36L–F5118–00	COUVERCLE ANTI-POUS, MOYEU COVER, HUB DUST	1					
27	92902–10200	RONDELLE WASHER	1					

SEACUBE
ONE-STOP PARTS SOLUTION

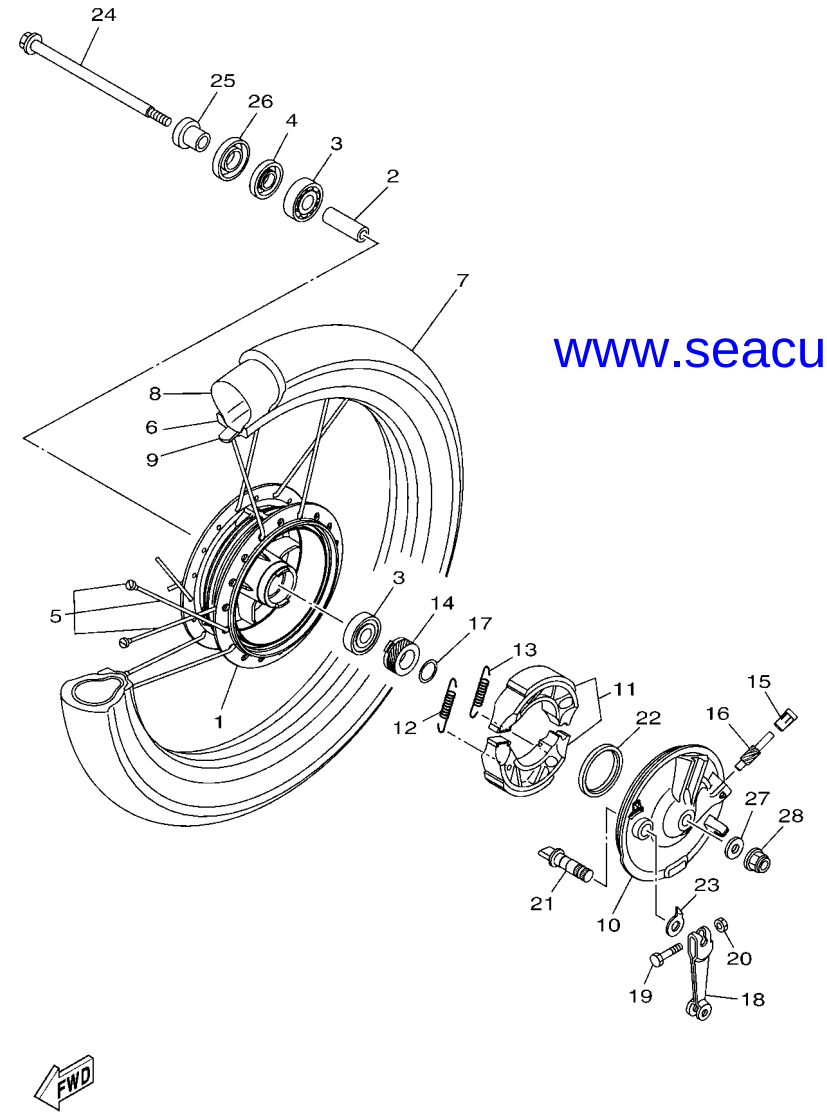

www.seacubemoto.com

FIG. 25 ROUE AVANT — FRONT WHEEL

REF. N°	N° PIECES PART NO.	DESCRIPTION DESCRIPTION	BY11					REMARQUES REMARKS
28	95602–10200	ECROU, AUTO-BLOCANT NUT, S/L FLANGE	1					

SEACUBE
ONE-STOP PARTS SOLUTION

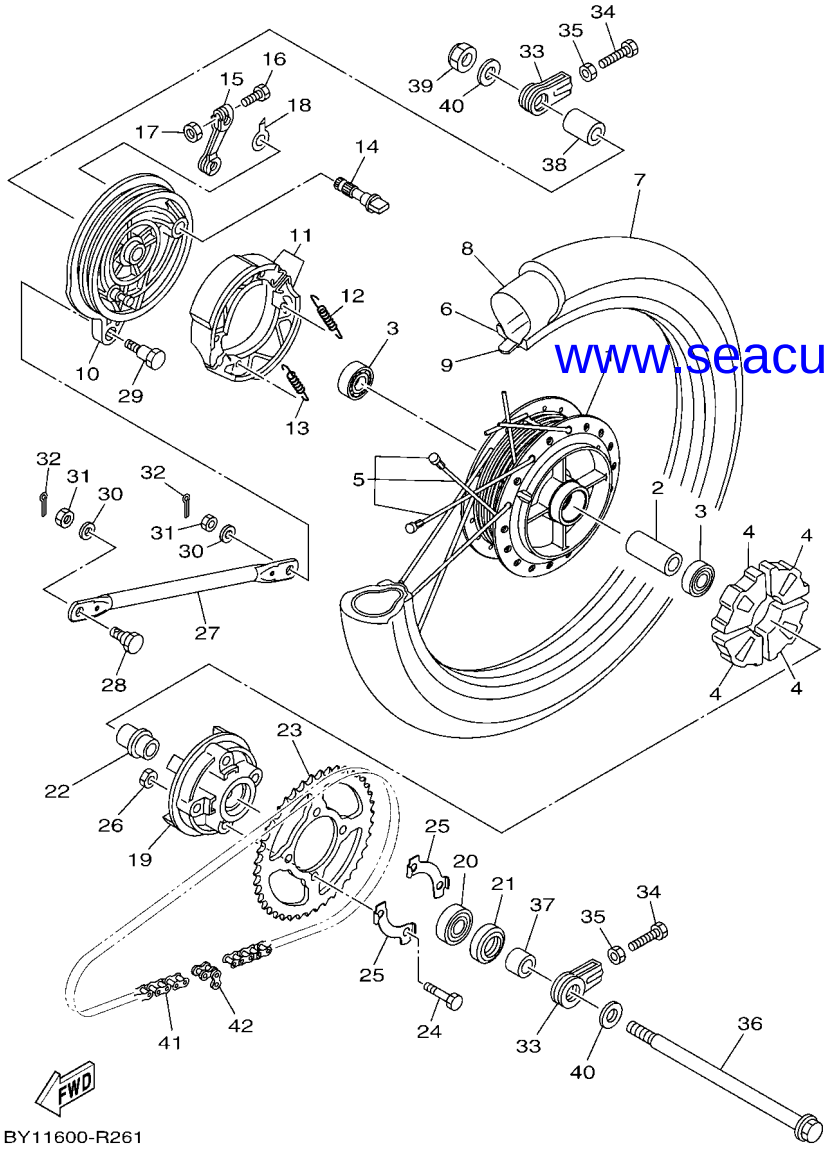

www.seacubemoto.com

FIG. 26 ROUE ARRIERE — REAR WHEEL

REF. N°	N° PIECES PART NO.	DESCRIPTION DESCRIPTION	BY11					REMARQUES REMARKS
1	B69–F5311–00	MOYEU, ARRIERE HUB, REAR	1					
2	90560–15136	ENTRETOISE SPACER	1					
3	93306–252YH	ROULEMENT BEARING	2					UR UR
	93306–202XT	ROULEMENT BEARING	2					UR UR
4	54B–F5364–00	AMORTISSEUR DAMPER	4					
5	B69–F5304–00	JEU DE RAYONS, ARRIERE SPOKE SET, REAR	1					
6	B69–F5344–00	JANTE ARRIERE RIM	1					
7	94130–17804	PNEU (3.00-17 6PR) TIRE (3.00-17 6PR)	1					TVS TVS
8	94227–17807	CHAMBRE A AIR (2.75-17) TUBE (2.75-17)	1					TVS TVS
9	B69–F510U–00	FOND DE JANTE BAND, RIM	1					
10	5US–F5321–00	FLASQUE DE FREIN PLATE, BRAKE SHOE	1					
11	2LP–WF53E–00	KIT DE MACHOIRE DE FREIN BRAKE SHOE KIT	1					
12	90506–12001	RESSORT, TENSION SPRING, TENSION	1					
13	90506–15001	RESSORT, TENSION SPRING, TENSION	1					
14	5YY–F5351–00	AXE A CAME CAMSHAFT	1					
15	54B–F5355–00	LEVIER, AXE A CAME LEVER, CAMSHAFT	1					
16	90101–06814	BOULON BOLT	1					
17	95307–06600	ECROU NUT	1					
18	36L–F533A–00	PLAQUE, INDICATEUR PLATE, INDICATOR	1					
19	2LP–F5366–00	MOYEU D'EMBRAYAGE CLUTCH, HUB	1					
20	93306–054Y5	ROULEMENT BEARING	1					
21	93106–26801	JOINT SPY OIL SEAL	1					
22	5YY–F5387–00	AXE, ROUE DENTEE AXLE, SPROCKET	1					
23	B44–F5442–00	PIGNON SORTIE DE B.V. (42D) SPROCKET, DRIVEN (42T)	1					
24	90109–08201	BOULON BOLT	4					
25	2LP–F5412–00	RONDELLE WASHER	2					
26	90179–08639	ECROU NUT	4					

SEACUBE
ONE-STOP PARTS SOLUTION

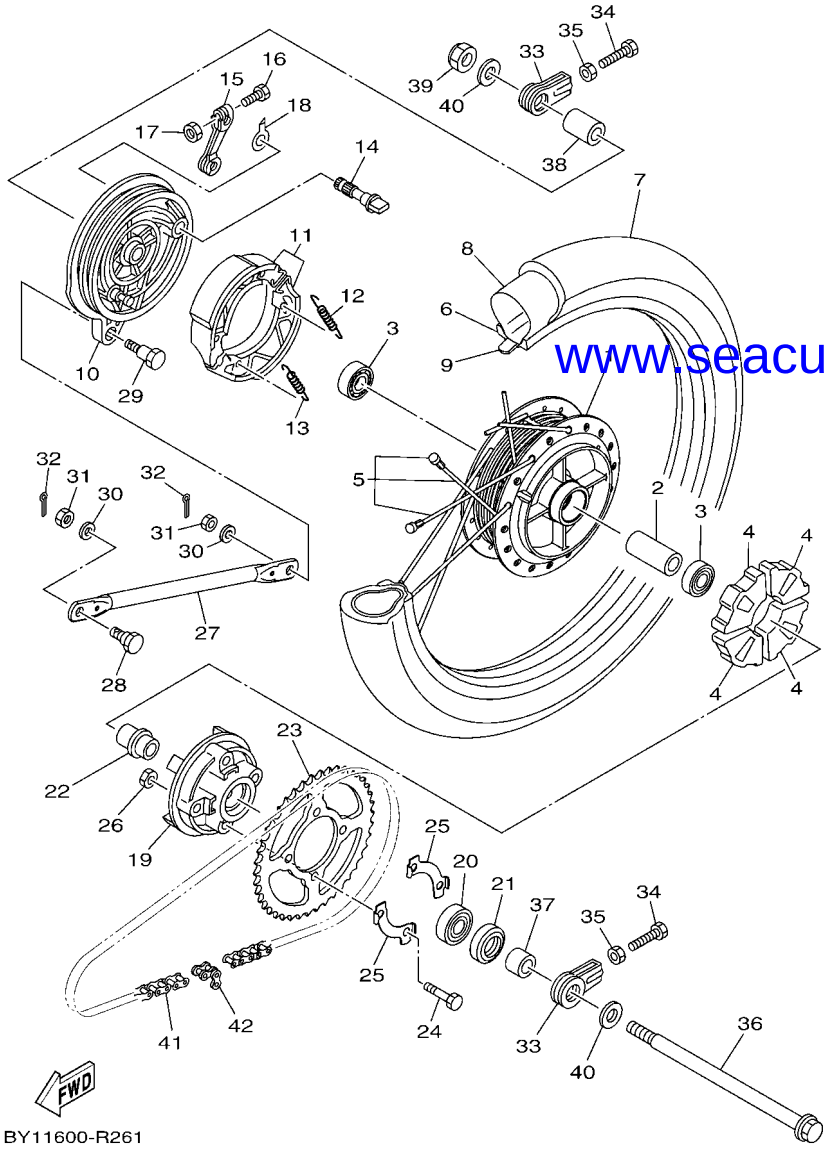

BY11600-R261

www.seacubemoto.com

FIG. 26 ROUE ARRIERE — REAR WHEEL

REF. N°	N° PIECES PART NO.	DESCRIPTION DESCRIPTION	BY11					REMARQUES REMARKS
27	B44–F5371–00	BARRE, TENSION BAR, TENSION	1					
28	90109–08831	BOULON BOLT	1					
29	90109–08840	BOULON BOLT	1					
30	92902–08200	RONDELLE WASHER	2					
31	95302–08700	ECROU NUT, HEXAGON	2					
32	91401–20012	GOUPILLE PIN, COTTER	2					
33	36L–F5389–00	TENDEUR 2, CHAINE PULLER, CHAIN 2	2					
34	90101–08056	BOULON BOLT	2					
35	95302–08600	ECROU NUT, HEXAGON	2					
36	36L–F5381–01	AXE, ROUE AXLE, WHEEL	1					
37	5KA–F5376–00	COLLIER D'AXE DE ROUE COLLAR, WHEEL	1					
38	5KA–F5377–00	COLLIER D'AXE DE ROUE COLLAR, WHEEL	1					
39	90185–14800	ECROU,AUTO-BLOQUANT NUT, SELF-LOCKING	1					
40	90201–15814	RONDELLE, PLATE WASHER, PLATE	2					
41	94568–J0113	CHAINE (DID420AD 113LL) CHAIN (DID420AD 113LL)	1					
42	94668–J0001	ATTACHE RAPIDE (DID420AD RJ) JOINT, CHAIN (DID420AD RJ)	1					

SEACUBE
ONE-STOP PARTS SOLUTION

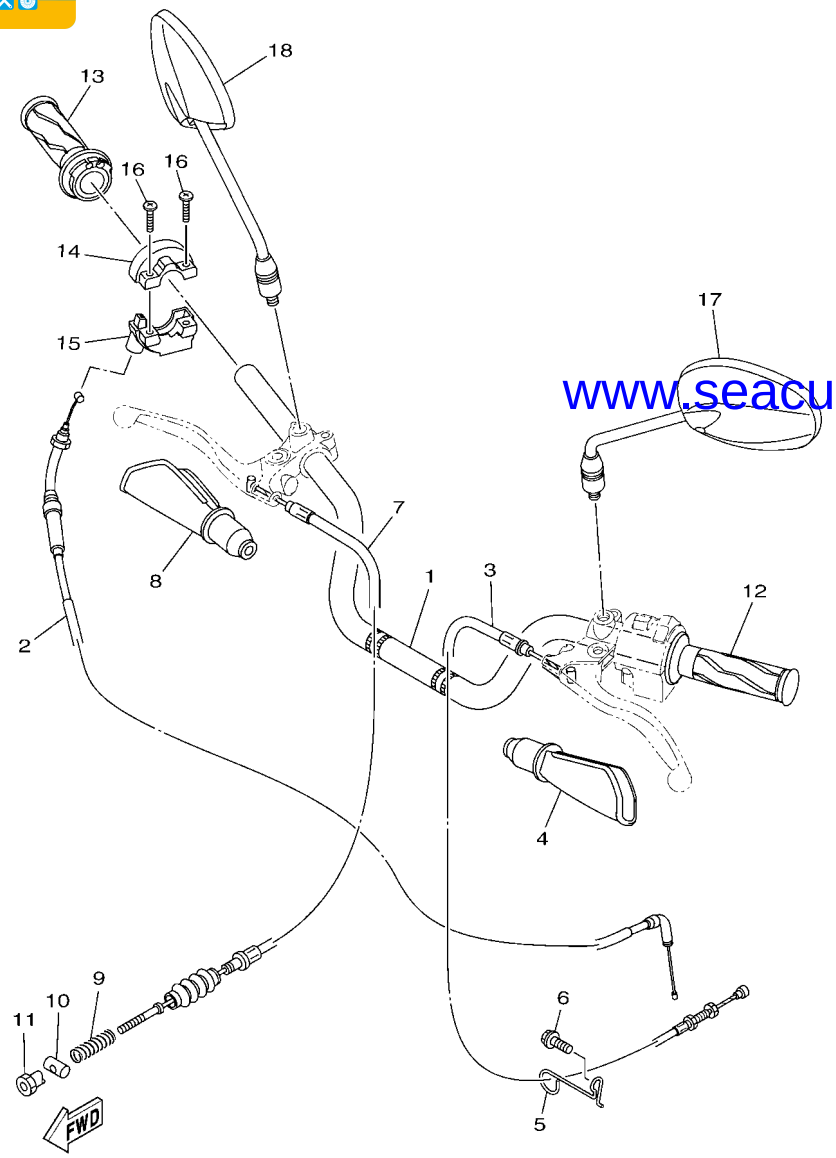

BY11600-R270

FIG. 27 GUIDON & CABLE — STEERING HANDLE & CABLE

REF. N°	N° PIECES PART NO.	DESCRIPTION DESCRIPTION	BY11					REMARQUES REMARKS
1	B44–F6111–00	GUIDON HANDLEBAR	1					
2	B44–F6311–02	CABLE 1, ACCELERATEUR CABLE, THROTTLE 1	1					
3	B44–F6335–01	CABLE, EMBRAYAGE CABLE, CLUTCH	1					
4	5TS–F6372–00	CACHE DE LEVIER DE GUIDON 1 COVER, HANDLE LEVER 1	1					
5	2LP–F1164–00	SUPPORT DE CABLE HOLDER, CABLE	1					
6	95822–06012	BOULON BOLT, FLANGE	1					
7	B44–F6341–00	CABLE, FREIN WIRE, BRAKE 1	1					
8	5TS–F6372–00	CACHE DE LEVIER DE GUIDON 1 COVER, HANDLE LEVER 1	1					
9	90501–10245	RESSORT, COMPRESSION SPRING, COMPRESSION	1					
10	90249–12008	GOUPILLE PIN	1					
11	90179–06806	ECROU NUT	1					
12	54B–F6241–00	POIGNEE GRIP	1					
13	2LP–F6240–00	POIGNEE COMPLETE GRIP ASSY	1					
14	B69–F6281–00	BOUCHON SUPERIEUR, POIGNEE CAP, GRIP UPPER	1					
15	B69–F6282–00	COUVERCLE, POIGNEE PLAQUE CAP, GRIP UNDER	1					
16	98502–05020	VIS SCREW, PAN HEAD	2					
17	B44–F6280–00	RETROVISEUR (GAUCHE) REAR VIEW MIRROR ASSY (LEFT)	1					
18	B44–F6290–00	RETROVISEUR (DROIT) REAR VIEW MIRROR ASSY (RIGHT)	1					

www.seacubemoto.com

SEACUBE
ONE-STOP PARTS SOLUTION

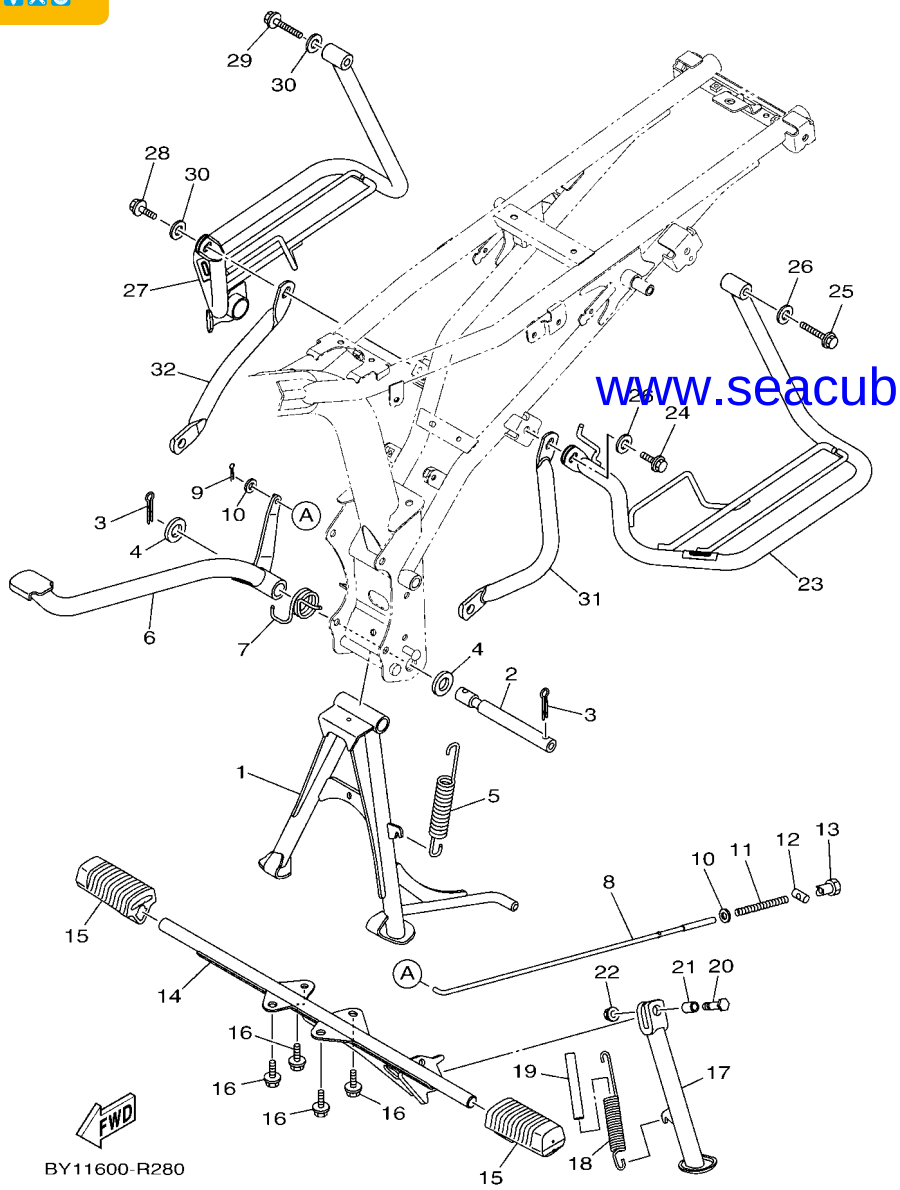

www.seacubemoto.com

FIG. 28 SUPPORT & REPOSE PIED — STAND & FOOTREST

REF. N°	N° PIECES PART NO.	DESCRIPTION DESCRIPTION	BY11					REMARQUES REMARKS
1	B44–F7111–00	BEQUILLE, CENTRALE STAND, MAIN	1					
2	2LP–F7112–00	AXE, BEQUILLE CENTRALE SHAFT, MAIN STAND	1					
3	91402–30030	GOUPILLE PIN, COTTER	2					
4	90201–17810	RONDELLE, PLATE WASHER, PLATE	2					
5	90506–35816	RESSORT, TENSION SPRING, TENSION	1					
6	B44–F7211–00	PEDALE, FREIN PEDAL, BRAKE	1					
7	90508–35800	RESSORT, TORSION SPRING, TORSION	1					
8	B44–F7231–00	TIGE DE FREIN ROD, BRAKE	1					
9	91401–20012	GOUPILLE PIN, COTTER	1					
10	92902–06200	RONDELLE WASHER	2					
11	90501–10245	RESSORT, COMPRESSION SPRING, COMPRESSION	1					
12	90249–12008	GOUPILLE PIN	1					
13	90179–06806	ECROU NUT	1					
14	B44–F7411–00	REPOSE-PIEDS 1 FOOTREST 1	1					
15	B44–F7413–00	GARNITURE, REPOSE-PIEDS COVER, FOOTREST	2					
16	90105–08809	BOULON BOLT, FLANGE	4					
17	B44–F7311–00	BEQUILLE, LATERALE STAND, SIDE	1					
18	90506–28800	RESSORT, TENSION SPRING, TENSION	1					
19	54B–F247B–00	DURITE 2 HOSE 2	1					
20	90101–08847	BOULON BOLT	1					
21	90387–08820	COLLERETTE COLLAR	1					
22	95602–08200	ECROU, AUTO-BLOCANT NUT, U FLANGE	1					
23	B69–F1298–00	PROTECTEUR PROTECTOR, FOOT REST	1					
24	95812–08020	BOULON BOLT, FLANGE	1					
25	95812–08050	BOULON BOLT, FLANGE	1					
26	92902–08200	RONDELLE WASHER	2					
27	B69–F1299–00	PROTECTEUR 2 PROTECTOR, FOOT REST 2	1					

SEACUBE
ONE-STOP PARTS SOLUTION

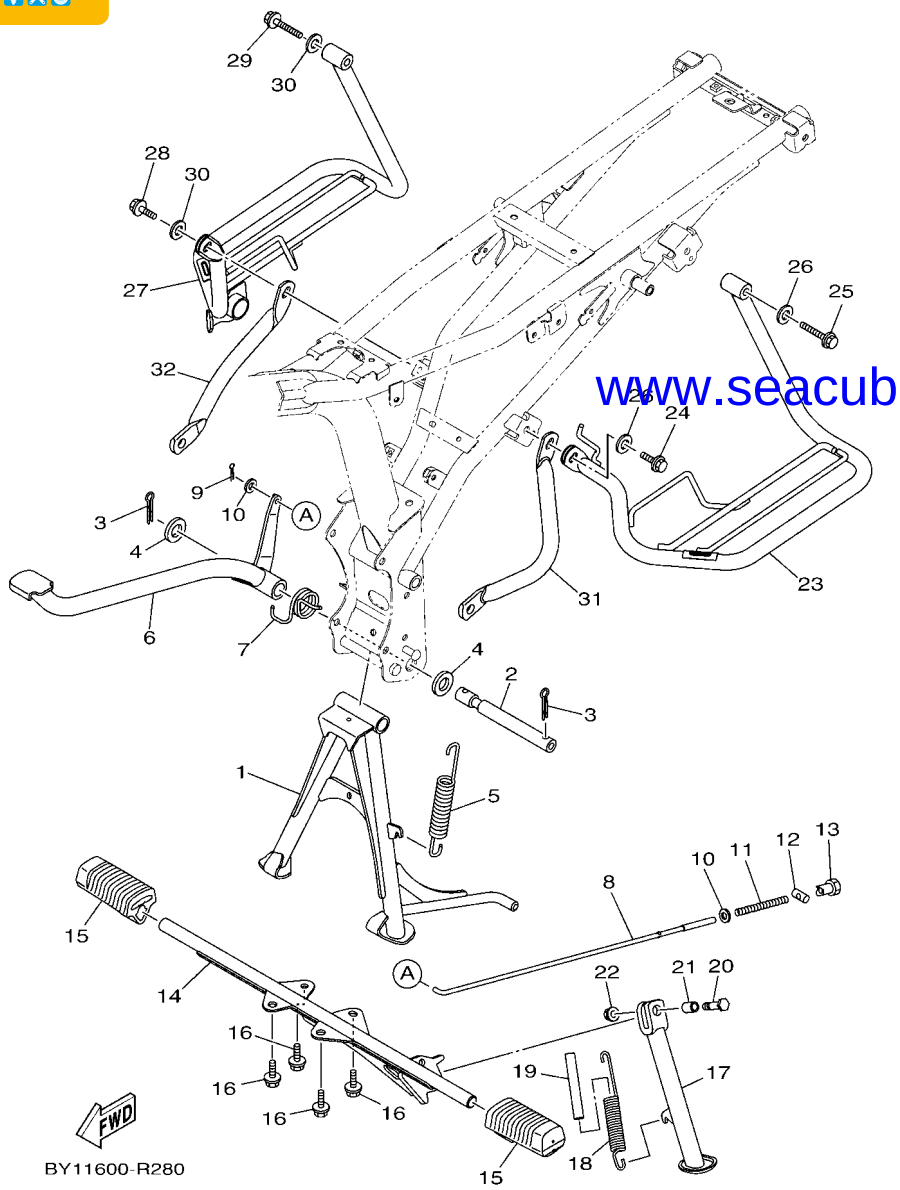

www.seacubemoto.com

FIG. 28 SUPPORT & REPOSE PIED — STAND & FOOTREST

REF. N°	N° PIECES PART NO.	DESCRIPTION DESCRIPTION	BY11					REMARQUES REMARKS
28	95812–08020	BOULON BOLT, FLANGE	1					
29	95812–08050	BOULON BOLT, FLANGE	1					
30	92902–08200	RONDELLE WASHER	2					
31	B69–F7469–00	RENFORCEMENT 1 REINFORCEMENT 1	1					
32	B69–F7479–00	RENFORCEMENT 2 RENFORCEMENT 2	1					

SEACUBE
ONE-STOP PARTS SOLUTION

FIG. 29 GENERATRICE — GENERATOR

REF. N°	N° PIECES PART NO.	DESCRIPTION DESCRIPTION	BY11					REMARQUES REMARKS
1	B69–H1450–00	ROTOR COMPLET ROTOR ASSY	1					
2	B44–H1410–00	STATOR COMPLET STATOR ASSY	1					
3	91312–06025	BOULON, TETE HEXAGONALE CREUSE BOLT, HEXAGON SOCKET HEAD	2					
4	91312–06014	BOULON BOLT	2					
5	90201–122H1	RONDELLE, PLATE WASHER, PLATE	1					
6	95702–12500	ECROU, A COLLERETTE NUT, FLANGE	1					

www.seacubemoto.com

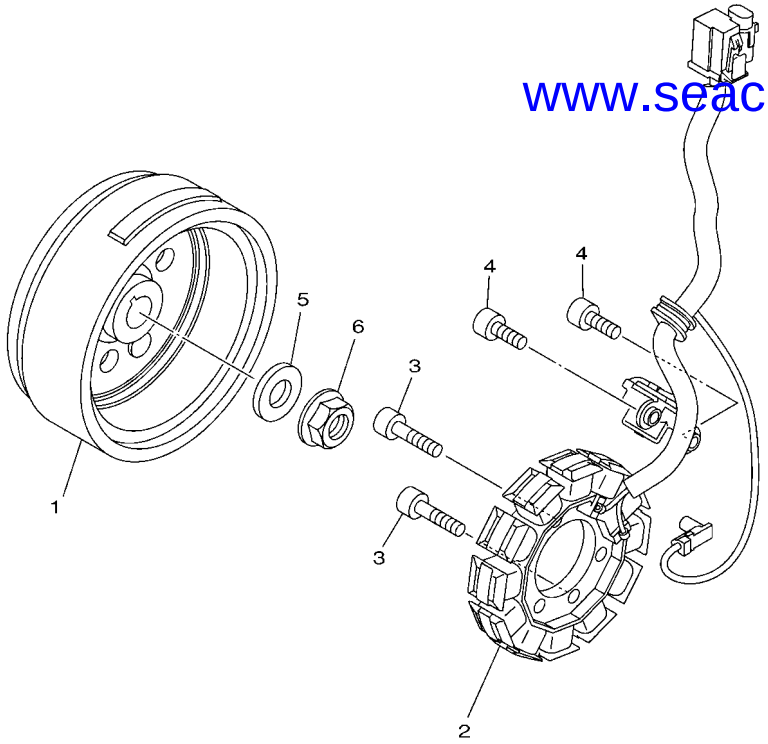

B441470-R300

SEACUBE
ONE-STOP PARTS SOLUTION

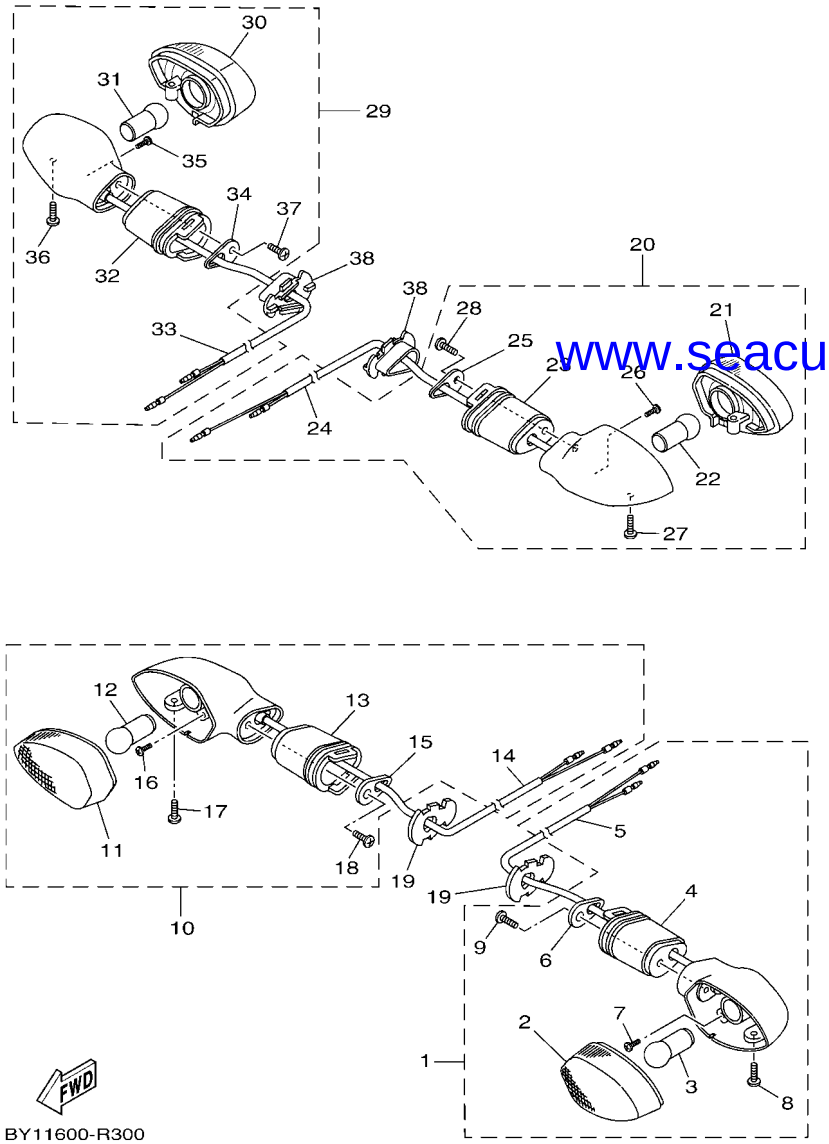

www.seacubemoto.com

FIG. 30 CLIGNOTANT — FLASHER LIGHT

REF. N°	N° PIECES PART NO.	DESCRIPTION DESCRIPTION	BY11					REMARQUES REMARKS
1	5YY–H3310–11	CLIGNOTANT AVANT 1 CPLT FRONT FLASHER LIGHT ASSY 1	1					
2	21C–H333A–00	.OPTIQUE COMPLET 1 .LENS COMP 1	1					
3	1PM–H3311–00	.AMPOULE (12V-10W) .BULB (12V-10W)	1					
4	20P–H3318–00	.SUPPORT, CLIGNOTANT 1 .STAY, FLASHER 1	1					
5	5YY–H331E–00	.CORDON COMPLET .CORD ASSY	1					
6	20P–H3618–00	.PLAQUE .PLATE	1					
7	20P–H213A–00	.VIS, FIXATION .SCREW, FITTING	1					
8	20P–H3333–00	.VIS, FIXATION DE CABOCHON .SCREW, LENS FITTING	1					
9	20P–H2133–00	.VIS, FIXATION .SCREW, FITTING	1					
10	5YY–H3320–11	CLIGNOTANT AVANT 2 CPLT. FRONT FLASHER LIGHT ASSY 2	1					
11	21C–H334A–00	.OPTIQUE COMPLET 2 .LENS COMP 2	1					
12	1PM–H3311–00	.AMPOULE (12V-10W) .BULB (12V-10W)	1					
13	20P–H3318–00	.SUPPORT, CLIGNOTANT 1 .STAY, FLASHER 1	1					
14	5YY–H332E–00	.CORDON, COMPLET .CORD ASSY	1					
15	20P–H3618–00	.PLAQUE .PLATE	1					
16	20P–H213A–00	.VIS, FIXATION .SCREW, FITTING	1					
17	20P–H3333–00	.VIS, FIXATION DE CABOCHON .SCREW, LENS FITTING	1					
18	20P–H2133–00	.VIS, FIXATION .SCREW, FITTING	1					
19	2LP–H3318–00	SUPPORT, CLIGNOTANT 1 STAY, FLASHER 1	2					
20	1PM–H3330–00	CLIGNOTANT AR 1 CPLT. REAR FLASHER LIGHT ASSY 1	1					
21	21C–H333A–00	.OPTIQUE COMPLET 1 .LENS COMP 1	1					
22	1PM–H3311–00	.AMPOULE (12V-10W) .BULB (12V-10W)	1					
23	20P–H3318–00	.SUPPORT, CLIGNOTANT 1 .STAY, FLASHER 1	1					
24	21C–H355M–00	.CORDON COMPLET .CORD ASSY	1					
25	20P–H3618–00	.PLAQUE .PLATE	1					
26	20P–H213A–00	.VIS, FIXATION .SCREW, FITTING	1					
27	20P–H3333–00	.VIS, FIXATION DE CABOCHON .SCREW, LENS FITTING	1					

SEACUBE
ONE-STOP PARTS SOLUTION

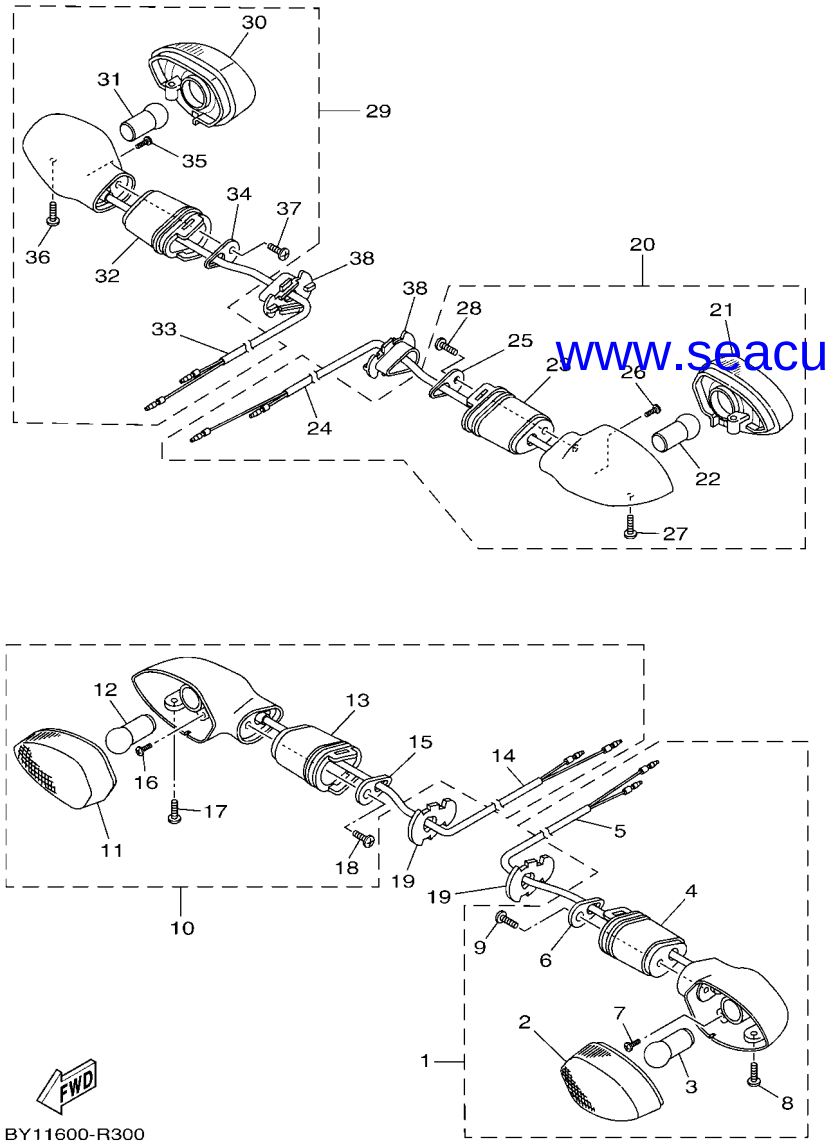

www.seacubemoto.com

FIG. 30 CLIGNOTANT — FLASHER LIGHT

REF. N°	N° PIECES PART NO.	DESCRIPTION DESCRIPTION	BY11					REMARQUES REMARKS
28	20P–H2133–00	.VIS, FIXATION .SCREW, FITTING	1					
29	1PM–H3340–00	CLIGNOTANT AR 2 CPLT. REAR FLASHER LIGHT ASSY 2	1					
30	21C–H334A–00	.OPTIQUE COMPLET 2 .LENS COMP 2	1					
31	1PM–H3311–00	.AMPOULE (12V-10W) .BULB (12V-10W)	1					
32	20P–H3318–00	.SUPPORT, CLIGNOTANT 1 .STAY, FLASHER 1	1					
33	21C–H334E–00	.CORDON COMPLET .CORD ASSY	1					
34	20P–H3618–00	.PLAQUE .PLATE	1					
35	20P–H213A–00	.VIS, FIXATION .SCREW, FITTING	1					
36	20P–H3333–00	.VIS, FIXATION DE CABOCHON .SCREW, LENS FITTING	1					
37	20P–H2133–00	.VIS, FIXATION .SCREW, FITTING	1					
38	5YY–H3318–10	SUPPORT, CLIGNOTANT 1 STAY, FLASHER 1	2					

SEACUBE
ONE-STOP PARTS SOLUTION

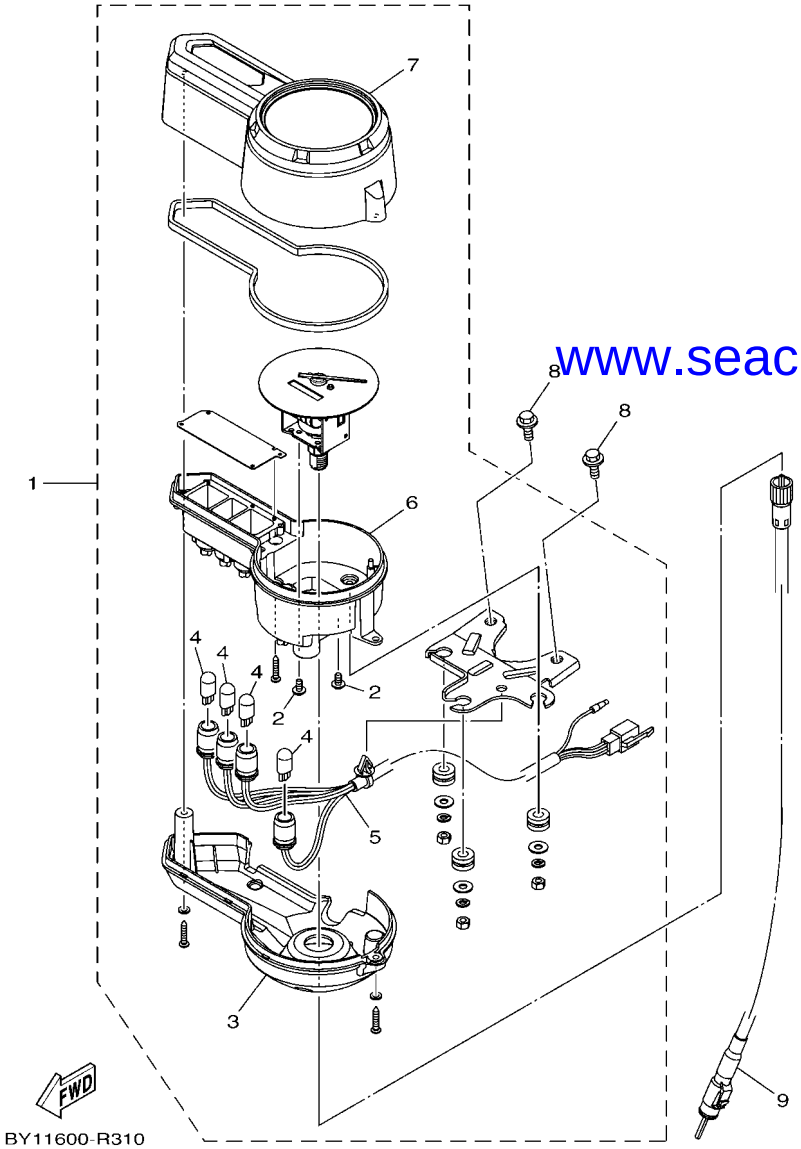

www.seacubemoto.com

FIG. 31 COMPTEUR — METER

REF. N°	N° PIECES PART NO.	DESCRIPTION DESCRIPTION	BY11					REMARQUES REMARKS
1	B69–H3500–00	COMPTEUR COMPLET METER ASSY	1					
2	98902–04008	.VIS, DE PRESSION .SCREW, BIND	2					
3	B69–H353F–00	.BOITIER, COMPTEUR INF .CASE, METER LOWER	1					
4	5TS–H3518–00	.AMPOULE (12V-1.7W) .BULB (12V-1.7W)	4					
5	B69–H350W–00	.CORDON DE FIL CPLT .SOCKET CORD ASSY	1					
6	B69–H353H–00	.BOITIER, COMPTEUR .CASE, UNDER	1					
7	B69–H353E–00	.BOITIER, COMPTEUR SUP .CASE, METER UPPER	1					
8	95822–06012	BOULON BOLT, FLANGE	2					
9	B44–H3550–00	CABLE DE COMPTEUR SPEEDOMETER CABLE ASSY	1					

SEACUBE
ONE-STOP PARTS SOLUTION

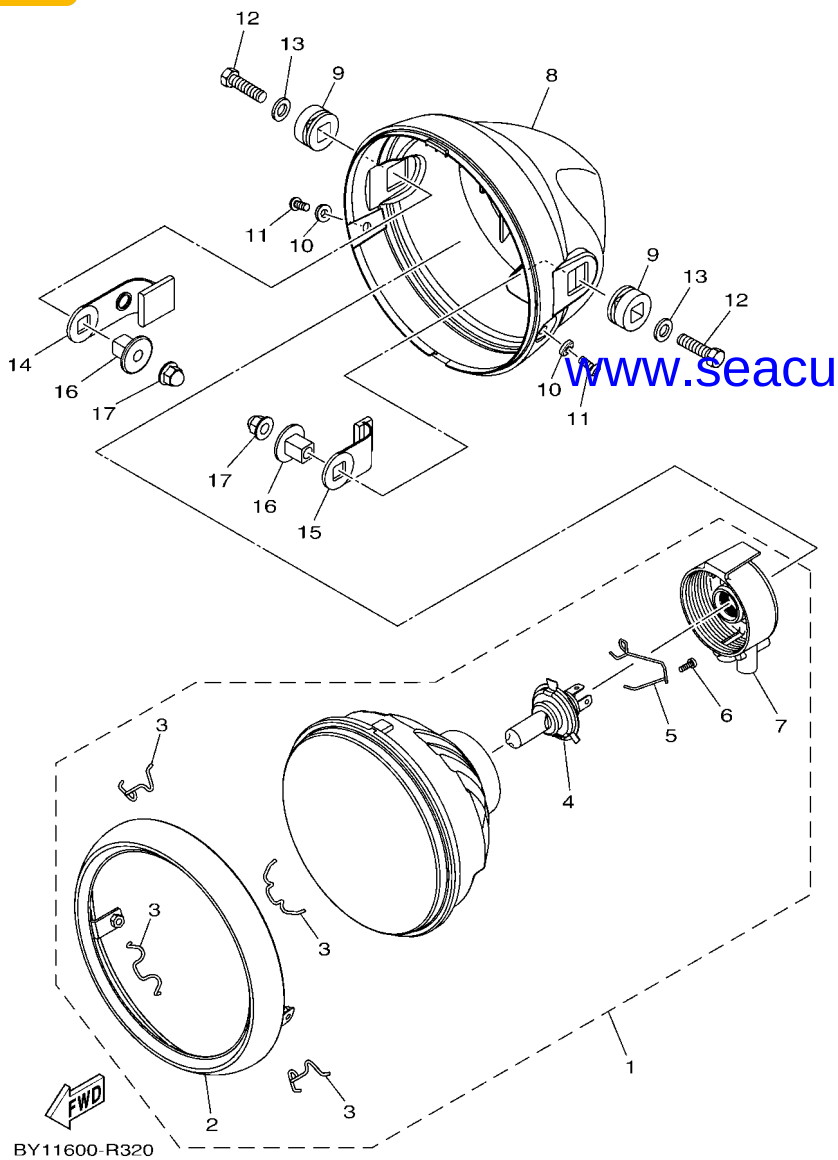

FIG. 32 PHARE — HEADLIGHT

REF. N°	N° PIECES PART NO.	DESCRIPTION DESCRIPTION	BY11					REMARQUES REMARKS
1	B69–H4310–00	PHARE COMPLET HEADLIGHT UNIT ASSY	1					
2	B69–H4315–00	.PORTIERE DE PHARE .RIM, HEADLIGHT	1					
3	B69–H4363–00	.DOUILLE .SPRG. LAMP SET	4					
4	5TS–H4314–00	.AMPOULE, PHARE (12V-35/35W) .BULB, HEADLIGHT (12V-35/35W)	1					
5	B69–H4335–00	.RESSORT .SPRING	1					
6	B69–H4726–00	.VIS .SCREW	1					
7	B69–H4397–00	.COUVERCLE, DOUILLE .COVER, SOCKET	1					
8	B69–H4311–00	CORPS, PHARE BODY, HEADLIGHT	1					
9	B69–H4345–00	AMORTISSEUR, PHARE DAMPER, HEADLIGHT	2					
10	B69–H4522–00	RONDELLE WASHER	2					
11	B69–H4526–00	VIS SCREW	2					
12	9700N–08030	BOULON BOLT	2					
13	92902–08600	RONDELLE, PLATE WASHER, PLATE	2					
14	B69–H2591–00	COLLIER BAND	1					
15	B69–H2592–00	COLLIER BAND	1					
16	B69–H4145–00	COLLERETTE, FIXATION DU CORPS COLLAR, BODY FITTING	2					
17	90176–08800	ECROU BORGNE NUT, CROWN	2					

www.seacubemoto.com

SEACUBE
ONE-STOP PARTS SOLUTION

FIG. 33 FEU ARRIERE — TAILLIGHT

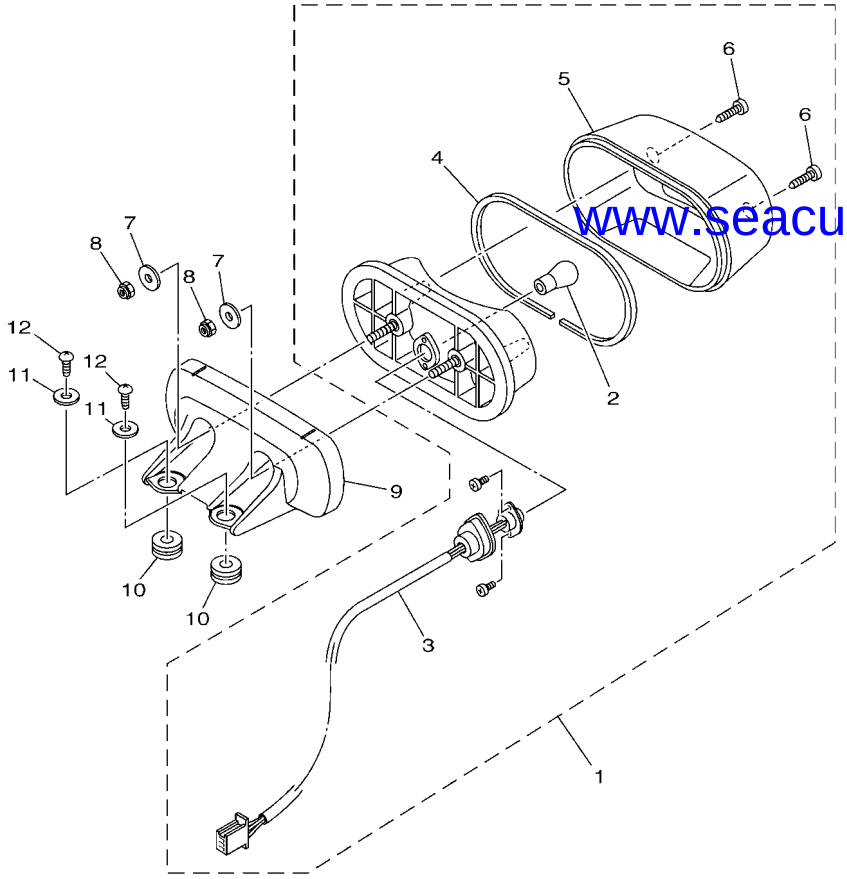

BY11600-R331

www.seacubemoto.com

REF. N°	N° PIECES PART NO.	DESCRIPTION DESCRIPTION	BY11					REMARQUES REMARKS
1	5KA–H4710–11	FEU ARRIERE TAILLIGHT UNIT ASSY	1					
2	5TS–H4714–10	.AMPOULE (12V-21/5W) .BULB (12V-21/5W)	1					
3	5KA–H4735–00	.CORDON DE FIL CPLT .SOCKET CORD ASSY	1					
4	5KA–H4723–00	.JOINT, DE CABOCHON DE FEU AR .GASKET, TAIL LENS	1					
5	5KA–H4721–11	.CABOCHON, DE FEU ARRIERE .LENS, TAILLIGHT	1					
6	97701–06020	.VIS .SCREW, TAPPING	2					
7	90201–06078	RONDELLE, PLATE WASHER, PLATE	2					
8	95707–06300	ECROU, NYLON NUT, NYLON	2					
9	B69–H4516–00	COUVERCLE, FEU ARRIERE COVER, TAILLIGHT	1					
10	90480–15363	PASSE-FIL GROMMET	3					
11	90201–05036	RONDELLE, PLATE WASHER, PLATE	2					
12	97702–50016	VIS, TETE FRAISEE SCREW, TAPPING	2					

SEACUBE
ONE-STOP PARTS SOLUTION

FIG. 34 COMMUTATEUR ET LEVIER — HANDLE SWITCH & LEVER

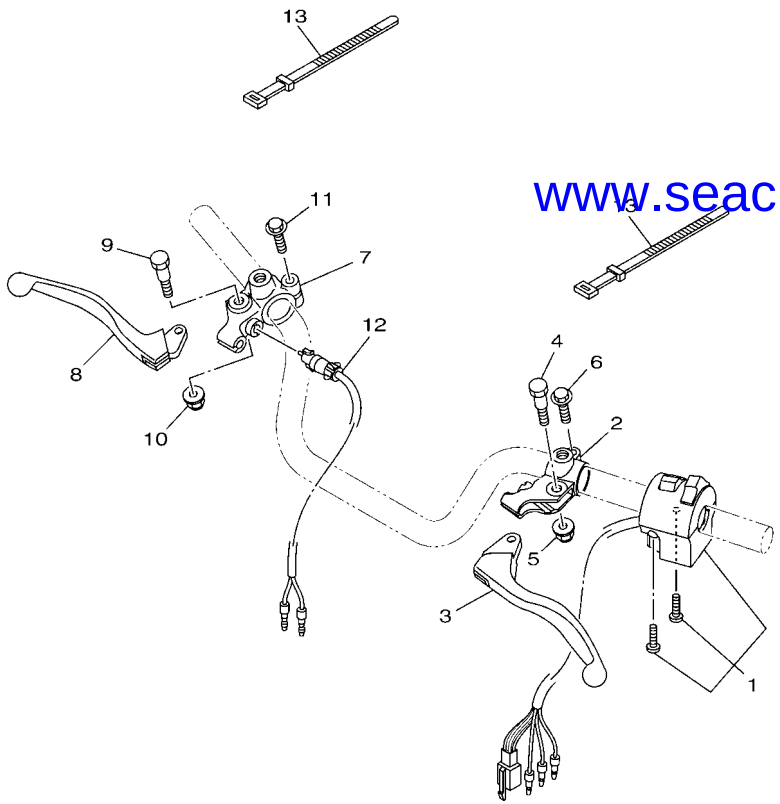

BY11600-R340

www.seacubemoto.com

REF. N°	N° PIECES PART NO.	DESCRIPTION DESCRIPTION	BY11					REMARQUES REMARKS
1	B69–H3972–00	COMMUTATEUR 4, SUR GUIDON SWITCH, HANDLE 4	1					
2	5TS–H2911–01	SUPPORT, LEVIER 1 HOLDER, LEVER 1	1					
3	4LS–H3912–00	LEVIER 1 LEVER 1	1					
4	36L–H3945–V0	BOULON, LEVIER BOLT, LEVER	1					
5	95702–06500	ECROU, A COLLERETTE NUT, FLANGE	1					
6	97507–06425	VIS HEXAGONAL AVC RONDELLE BOLT, WITH WASHER	1					
7	2LP–H2921–00	SUPPORT, LEVIER 2 HOLDER, LEVER 2	1					
8	4LS–H3922–00	LEVIER 2 LEVER 2	1					
9	36L–H3945–V0	BOULON, LEVIER BOLT, LEVER	1					
10	95702–06500	ECROU, A COLLERETTE NUT, FLANGE	1					
11	97507–06425	VIS HEXAGONAL AVC RONDELLE BOLT, WITH WASHER	1					
12	54B–H3980–01	CONTACTEUR DU FEU STOP CPLT FRONT STOP SWITCH ASSY	1					
13	36L–H3936–00	COLLIER, CORDON DE COMMUTATEUR BAND, SWITCH CORD	2					

SEACUBE
ONE-STOP PARTS SOLUTION

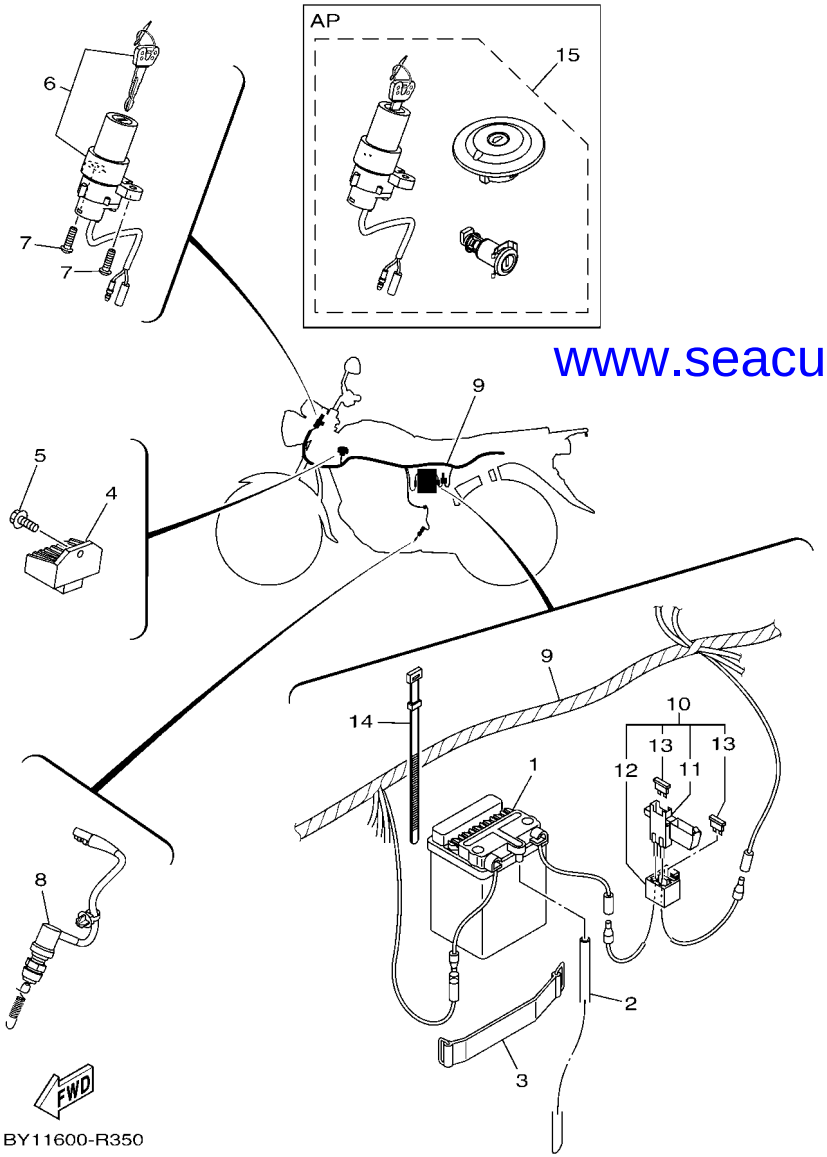

www.seacubemoto.com

FIG. 35 PARTIE ELECTRIQUE 1 — ELECTRICAL 1

REF. N°	N° PIECES PART NO.	DESCRIPTION DESCRIPTION	BY11					REMARQUES REMARKS
1	5DG–H2110–00	BATTERIE COMPLET (AB2.5L-C-4) BATTERY ASSY (AMC AB2.5L-C-4)	1					
2	90446–07811	DURITE HOSE	1					
3	5YY–H2131–10	BANDE, DE BATTERIE BAND, BATTERY	1					
4	B44–H1960–00	REDRESSEUR REGULATEUR CPLT RECTIFIER & REGULATOR ASSY	1					
5	95822–06012	BOULON BOLT, FLANGE	1					
6	5TS–H2501–41	CONTACTEUR A CLEF D'ANTIVOL MAIN SWITCH STEERING LOCK	1					
7	90149–06118	VIS SCREW	2					
8	B44–H2530–00	COMMUTATEUR CPLT STOP SWITCH ASSY	1					
9	B69–H2590–00	FAISCEAU DE FILS COMPLET WIRE HARNESS ASSY	1					
10	B44–H2150–00	SUPPORT DE FUSIBLE FUSE HOLDER ASSY	1					
11	21C–H2152–00	.SUPPORT, FUSIBLE .HOLDER, FUSE	1					
12	21C–H2591–00	.COLLIER .BAND	1					
13	1GC–H2151–00	.FUSIBLE (10A) .FUSE (10A)	2					
14	5TS–H3936–01	COLLIER, CORDON DE COMMUTATEUR BAND, SWITCH CORD	1					
15	5TS–XH250–22	CONTACTEUR A CLEF D'ANTIVOL MAIN SW. STRG. LOCK SUB ASSY	1					AP AP

SEACUBE
ONE-STOP PARTS SOLUTION

FIG. 36 PARTIE ELECTRIQUE 2 — ELECTRICAL 2

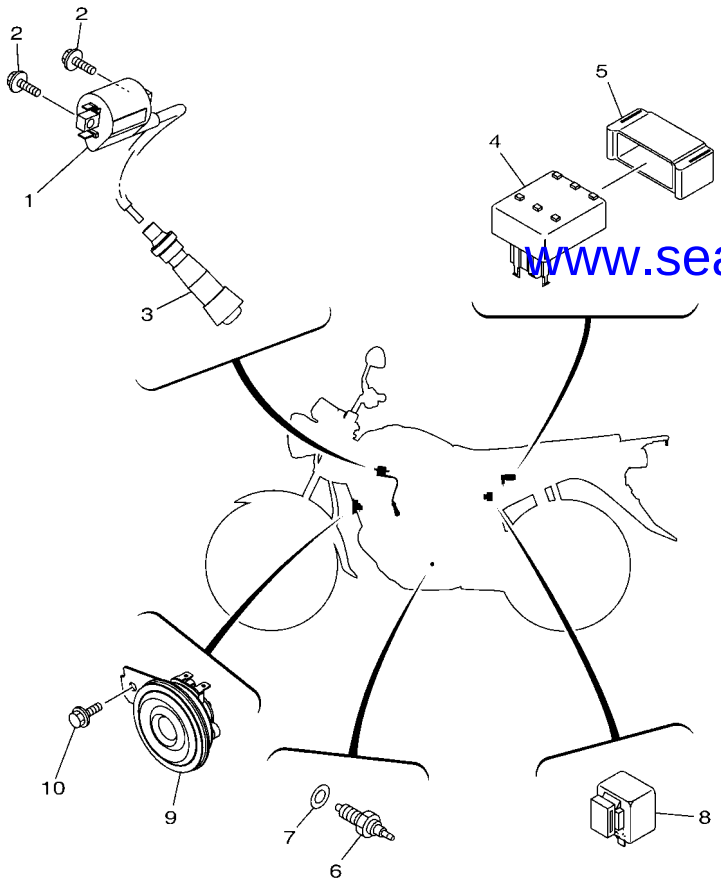

BY11600-R360

REF. N°	N° PIECES PART NO.	DESCRIPTION DESCRIPTION	BY11					REMARQUES REMARKS
1	2S5–H2310–01	BOBINE D'ALLUMAGE IGNITION COIL ASSY	1					
2	97502–05520	VIS HEXAGONAL AVC RONDELLE BOLT, WITH WASHER	2					
3	20P–H2370–02	ANTIPARASITE PLUG CAP ASSY	1					
4	B44–H2305–00	BLOC D'ALLUMAGE IGNITOR UNIT ASSY	1					
5	B44–H5546–00	COLLIER BAND	1					
6	21C–H2540–00	CONTACTEUR DE POINT-MORT NEUTRAL SWITCH ASSY	1					
7	90430–10148	JOINT GASKET	1					
8	5KA–H3350–00	RELAIS DES CLIGNOTANTS CPLT FLASHER RELAY ASSY	1					
9	2GS–H3371–00	AVERTISSEUR HORN	1					
10	95822–06012	BOULON BOLT, FLANGE	1					

www.seacubemoto.com

SEACUBE
ONE-STOP PARTS SOLUTION

INDEX NUMERIQUE
NUMERICAL INDEX

N° PIECES PART NO.	REF. N°
B44–11181–10	1 – 13
1AA–12118–00	3 – 5
B44–14103–00	7 – 10
B44–14104–00	7 – 17
B69–14112–30	7 – 6
B44–14131–00	7 – 2
22F–14139–00	7 – 22
B44–14141–32	7 – 11
B44–14142–12	7 – 5
2JG–14147–00	7 – 4
B44–14147–00	7 – 8
5TN–14150–00	7 – 18
B44–14158–00	7 – 24
B44–14169–00	7 – 25
3XG–14185–00	7 – 9
127–14186–00	7 – 19
1PM–14191–00	7 – 23
B44–14196–00	7 – 21
B44–14197–00	7 – 14
3G2–1423E–39	7 – 13
B44–1490J–00	7 – 7
55X–14937–00	7 – 15
B44–1496A–10	7 – 12
5LW–14994–00	7 – 16
B44–E1111–00	1 – 1
B44–E111F–00	1 – 10
B44–E112F–00	1 – 11
B44–E1166–00	6 – 14
B44–E1190–10	1 – 5
B44–E1193–00	1 – 6
B44–E1310–00	1 – 17
B44–E1351–10	1 – 18
B44–E1391–00	1 – 9
B44–E1603–00	2 – 6
B44–E1605–00	2 – 6
B44–E1607–00	2 – 6
B44–E1631–00	2 – 3
B44–E1633–00	2 – 4
B44–E1636–09	2 – 3
B44–E1638–09	2 – 3
B44–E2111–00	3 – 1
1GC–E2113–00	3 – 4
1GC–E2117–00	3 – 6
5TL–E2118–00	3 – 5
1GC–E2119–00	3 – 3
B44–E2121–00	3 – 2
B44–E2126–00	3 – 7
B44–E2146–00	3 – 11

N° PIECES PART NO.	REF. N°
B44–E2151–00	3 – 8
B44–E2156–00	3 – 12
1GC–E2159–00	3 – 10
B44–E2176–00	4 – 4
B44–E2210–00	4 – 10
B44–E2213–00	4 – 11
1GC–E2228–00	4 – 9
1GC–E2231–00	4 – 7
B44–E2241–00	4 – 8
B44–E2437–00	4 – 13
B44–E3300–00	5 – 1
4LS–E3411–00	5 – 5
B44–E3585–00	6 – 1
B69–E4101–00	7 – 1
B69–E4411–00	6 – 6
B44–E4412–00	6 – 7
B44–E443E–00	6 – 12
B44–E4450–00	6 – 8
B44–E4452–00	6 – 10
B44–E4453–00	6 – 9
5DG–E4613–00	8 – 5
B69–E4711–00	8 – 1
B44–E4718–00	8 – 2
B69–E4747–00	8 – 9
B69–E5111–00	9 – 1
21C–E5113–00	10 – 6
54B–E5362–00	10 – 18
B44–E5411–00	10 – 1
B44–E5418–00	10 – 9
B44–E5421–10	10 – 11
B44–E5441–10	10 – 12
B44–E5451–00	10 – 2
B44–E5461–00	10 – 13
B44–E5620–00	11 – 11
B44–E5641–00	11 – 2
B44–E5661–00	11 – 1
B44–E5664–00	11 – 8
B44–E5665–00	11 – 7
B44–E5671–00	11 – 5
B44–E5674–00	11 – 9
B44–E5767–00	11 – 6
B44–E6111–00	12 – 1
B44–E6150–00	12 – 6
B44–E6154–10	12 – 7
B44–E6156–00	12 – 16
B44–E6321–00	12 – 9
B44–E6324–00	12 – 11
B44–E6331–00	12 – 10

N° PIECES PART NO.	REF. N°
B44–E6333–00	12 – 13
B44–E6337–00	12 – 14
B44–E6337–00	12 – 21
B44–E6351–10	12 – 12
B44–E6356–20	12 – 17
B44–E6371–10	12 – 8
B44–E6380–20	12 – 20
B44–E6642–00	12 – 15
B44–E7211–00	13 – 8
B44–E7221–00	13 – 9
B44–E7231–00	13 – 11
B44–E7241–00	13 – 12
B44–E7410–01	13 – 1
B44–E7411–00	13 – 6
B44–E7442–00	13 – 10
B44–E7456–00	13 – 19
B44–E7471–00	13 – 4
21C–E8101–01	15 – 5
B44–E8111–00	15 – 9
B44–E8140–00	15 – 1
B44–E8144–00	15 – 2
4LS–E8185–00	14 – 2
B44–E8511–00	14 – 5
B44–E8512–00	14 – 6
B44–E8531–00	14 – 7
B44–E8540–00	14 – 1
B69–F1110–00	16 – 1
2LP–F1164–00	27 – 5
B69–F1279–00	16 – 8
B69–F1298–00	28 – 23
B69–F1299–00	28 – 27
B44–F1315–00	16 – 2
B44–F1316–00	16 – 3
B69–F1511–00	17 – 1
1DE–F1568–00	22 – 2
B69–F1611–00	17 – 5
B44–F1668–00	19 – 18
21C–F1717–00	23 – 14
B44–F171A–00	23 – 13
B69–F173E–01	18 – 2
B69–F173E–11	18 – 2
B69–F173E–21	18 – 2
B69–F173F–01	18 – 4
B69–F173F–11	18 – 4
B69–F173F–21	18 – 4
5KA–F176V–00	18 – 7
5YY–F1778–00	18 – 5
B69–F177G–00	18 – 9

N° PIECES PART NO.	REF. N°
B44–F2141–00	19 – 3
4LS–F2151–00	19 – 6
B44–F2210–10	19 – 12
B44–F2311–00	19 – 7
B44–F2312–00	19 – 8
5TS–F2315–00	19 – 11
54B–F247B–00	28 – 19
B44–F3100–10	21 – 1
B44–F3102–00	21 – 2
B44–F3103–00	21 – 18
5TS–F3110–50	21 – 4
	21 – 20
35B–F3114–00	21 – 15
	21 – 31
B44–F3118–00	21 – 17
	21 – 33
B44–F3126–00	21 – 3
B44–F3136–00	21 – 19
B44–F3141–00	21 – 14
	21 – 30
35B–F3144–00	21 – 13
	21 – 29
35B–F3145–00	21 – 11
	21 – 27
35B–F3151–00	21 – 8
	21 – 24
5TS–F3154–50	21 – 16
	21 – 32
35B–F3156–00	21 – 12
	21 – 28
35B–F3157–00	21 – 6
	21 – 22
35B–F3158–00	21 – 9
	21 – 25
35B–F3159–00	21 – 36
2LP–F3170–00	21 – 5
	21 – 21
35B–F3173–00	21 – 7
	21 – 23
B69–F3174–00	20 – 19
4LS–F317J–00	20 – 20
35B–F3181–00	21 – 10
	21 – 26
5TS–F3340–00	21 – 34
35B–F3346–00	21 – 35
2LP–F3389–00	20 – 22
35B–F3392–00	21 – 39
5KA–F3411–00	21 – 37

N° PIECES PART NO.	REF. N°
5KA–F3412–00	20 – 4
5KA–F3413–00	20 – 7
5KA–F3414–00	20 – 5
5YY–F3416–00	20 – 8
4LS–F3418–10	20 – 11
4LS–F341E–00	20 – 6
4LS–F341E–10	20 – 3
54B–F3427–00	20 – 14
B69–F3435–00	20 – 13
B44–F3441–00	20 – 17
B44–F3442–00	20 – 16
5KA–F3448–10	20 – 12
5YY–F3462–00	21 – 38
2LP–F411J–00	23 – 8
B44–F4135–00	22 – 15
2LP–F413Y–00	22 – 10
B44–F4141–00	22 – 22
B44–F414H–00	23 – 15
B44–F414J–00	23 – 1
21C–F4181–00	22 – 4
2LP–F4182–00	22 – 8
21C–F4183–00	22 – 14
2LP–F4183–00	22 – 9
B44–F4188–00	22 – 23
B44–F4188–10	22 – 24
B44–F418B–00	22 – 25
B69–F4244–00	23 – 3
B69–F4244–10	23 – 3
B69–F4244–20	23 – 3
B69–F4245–00	23 – 6
B69–F4245–10	23 – 6
B69–F4245–20	23 – 6
B69–F4246–00	23 – 4
B69–F4246–10	23 – 4
B69–F4246–20	23 – 4
B69–F4247–00	23 – 7
B69–F4247–10	23 – 7
B69–F4247–20	23 – 7
B44–F4311–01	22 – 20
B44–F4500–00	22 – 17
2GS–F4549–10	22 – 3
B69–F4730–00	24 – 1
4LS–F4741–00	24 – 2
B69–F4773–00	24 – 5
B69–F510U–00	25 – 9
	26 – 9
B69–F5111–00	25 – 1
36L–F5118–00	25 – 26

N° PIECES PART NO.	REF. N°
B44–F5121–10	25 – 10
B44–F5135–00	25 – 14
B44–F5136–00	25 – 15
B44–F5138–00	25 – 16
36L–F513A–00	25 – 23
B69–F5144–00	25 – 6
5TS–F5155–00	25 – 18
36L–F5181–00	25 – 24
B69–F5304–00	25 – 5
	26 – 5
B69–F5311–00	26 – 1
5US–F5321–00	26 – 10
36L–F533A–00	26 – 18
B69–F5344–00	26 – 6
5YY–F5351–00	25 – 21
	26 – 14
54B–F5355–00	26 – 15
54B–F5364–00	26 – 4
2LP–F5366–00	26 – 19
B44–F5371–00	26 – 27
5KA–F5376–00	26 – 37
5KA–F5377–00	26 – 38
36L–F5381–01	26 – 36
5YY–F5387–00	26 – 22
36L–F5389–00	26 – 33
2LP–F5412–00	26 – 25
B44–F5442–00	26 – 23
B44–F6111–00	27 – 1
2LP–F6240–00	27 – 13
54B–F6241–00	27 – 12
B44–F6280–00	27 – 17
B69–F6281–00	27 – 14
B69–F6282–00	27 – 15
B44–F6290–00	27 – 18
B44–F6311–02	27 – 2
B44–F6335–01	27 – 3
B44–F6341–00	27 – 7
5TS–F6372–00	27 – 4
	27 – 8
B44–F7111–00	28 – 1
2LP–F7112–00	28 – 2
54B–F7114–00	8 – 4
B44–F7211–00	28 – 6
B44–F7231–00	28 – 8
B44–F7311–00	28 – 17
B44–F7411–00	28 – 14
B44–F7413–00	28 – 15
B69–F7469–00	28 – 31

www.seacubemoto.com

SEACUBE
ONE-STOP PARTS SOLUTION

INDEX NUMERIQUE
NUMERICAL INDEX

N° PIECES PART NO.	REF. N°
B69–F7479–00	28 – 32
2LP–F8100–00	18 – 12
B44–F8418–00	16 – 9
B44–H1410–00	29 – 2
B69–H1450–00	29 – 1
B44–H1960–00	35 – 4
5DG–H2110–00	35 – 1
5YY–H2131–10	35 – 3
20P–H2133–00	30 – 9
	30 – 18
	30 – 28
	30 – 37
20P–H213A–00	30 – 7
	30 – 16
	30 – 26
	30 – 35
B44–H2150–00	35 – 10
1GC–H2151–00	35 – 13
21C–H2152–00	35 – 11
B44–H2305–00	36 – 4
2S5–H2310–01	36 – 1
20P–H2370–02	36 – 3
5TS–H2501–41	35 – 6
B44–H2530–00	35 – 8
21C–H2540–00	36 – 6
B69–H2590–00	35 – 9
21C–H2591–00	35 – 12
B69–H2591–00	32 – 14
B69–H2592–00	32 – 15
5TS–H2911–01	34 – 2
2LP–H2921–00	34 – 7
5YY–H3310–11	30 – 1
1PM–H3311–00	30 – 3
	30 – 12
	30 – 22
	30 – 31
20P–H3318–00	30 – 4
	30 – 13
	30 – 23
	30 – 32
2LP–H3318–00	30 – 19
5YY–H3318–10	30 – 38
5YY–H331E–00	30 – 5
5YY–H3320–11	30 – 10
5YY–H332E–00	30 – 14
1PM–H3330–00	30 – 20
20P–H3333–00	30 – 8
	30 – 17

N° PIECES PART NO.	REF. N°
20P–H3333–00	30 – 27
	30 – 36
21C–H333A–00	30 – 2
	30 – 21
1PM–H3340–00	30 – 29
21C–H334A–00	30 – 11
	30 – 30
21C–H334E–00	30 – 33
5KA–H3350–00	36 – 8
2GS–H3371–00	36 – 9
B69–H3500–00	31 – 1
B69–H350W–00	31 – 5
5TS–H3518–00	31 – 4
B69–H353E–00	31 – 2
B69–H353F–00	31 – 3
B69–H353H–00	31 – 6
B44–H3550–00	31 – 9
21C–H355M–00	30 – 24
20P–H3618–00	30 – 6
	30 – 15
	30 – 25
	30 – 34
4LS–H3912–00	34 – 3
4LS–H3922–00	34 – 8
36L–H3936–00	34 – 13
5TS–H3936–01	35 – 14
36L–H3945–V0	34 – 4
	34 – 9
B69–H3972–00	34 – 1
54B–H3980–01	34 – 12
B69–H4145–00	32 – 16
B69–H4310–00	32 – 1
B69–H4311–00	32 – 8
5TS–H4314–00	32 – 4
B69–H4315–00	32 – 2
B69–H4335–00	32 – 5
B69–H4345–00	32 – 9
B69–H4363–00	32 – 3
B69–H4397–00	32 – 7
B69–H4516–00	33 – 9
B69–H4522–00	32 – 10
B69–H4526–00	32 – 11
5KA–H4710–11	33 – 1
5TS–H4714–10	33 – 2
5KA–H4721–11	33 – 5
5KA–H4723–00	33 – 4
B69–H4726–00	32 – 6
5KA–H4735–00	33 – 3

N° PIECES PART NO.	REF. N°
B44–H5546–00	36 – 5
B44–WE140–00	2 – 1
B44–WE140–00	4 – 1
B44–WE512–00	9 – 2
B44–WF178–00	18 – 6
B44–WF211–00	19 – 1
B69–WF410–00	22 – 1
5TS–WF461–30	22 – 16
2LP–WF53E–00	25 – 11
	26 – 11
B69–XF171–00	18 – 1
B69–XF171–10	18 – 1
B69–XF171–20	18 – 1
B69–XF172–00	18 – 3
B69–XF172–10	18 – 3
B69–XF172–20	18 – 3
B44–XF412–10–P0	23 – 2
B44–XF412–10–P3	23 – 2
B44–XF412–10–P4	23 – 2
B44–XF413–10–P0	23 – 5
B44–XF413–10–P3	23 – 5
B44–XF413–10–P4	23 – 5
5TS–XH250–22	35 – 15
90101–06814	25 – 19
	26 – 16
90101–06834	4 – 3
90101–08056	26 – 34
90101–08847	28 – 20
90101–10802	20 – 15
90105–07801	4 – 5
90105–08007	16 – 6
90105–08809	28 – 16
90105–088A6	16 – 4
90109–06193	15 – 3
90109–08201	26 – 24
90109–08831	26 – 28
90109–08840	26 – 29
90110–06843	1 – 16
90111–05035	5 – 2
90149–06085	14 – 4
90149–06108	22 – 18
90149–06118	35 – 7
90159–06067	18 – 8
	23 – 11
90159–06844	20 – 23
90170–05302	3 – 9
90170–07800	1 – 8
90170–12060	12 – 19

N° PIECES PART NO.	REF. N°
90176–08800	32 – 17
90179–06806	27 – 11
	28 – 13
90179–06834	23 – 10
90179–08639	26 – 26
90179–25002	20 – 9
90183–05818	23 – 16
90183–06818	6 – 19
90185–14800	26 – 39
90201–05036	33 – 11
90201–06078	17 – 4
	24 – 4
	33 – 7
90201–06086	22 – 6
90201–06883	4 – 2
90201–081R9	19 – 14
	19 – 16
90201–08612	8 – 10
90201–10065	20 – 2
90201–12045	19 – 5
90201–122H1	12 – 4
	29 – 5
90201–127E1	13 – 7
90201–13803	11 – 4
90201–15814	26 – 40
90201–15834	19 – 13
90201–17810	28 – 4
90201–20801	25 – 17
90202–05807	22 – 19
90202–26142	20 – 10
90209–17285	13 – 13
90215–12815	12 – 18
90249–12008	27 – 10
	28 – 12
90280–03017	2 – 7
90282–05005	12 – 3
90340–12808	5 – 3
90340–14117	10 – 4
90387–06048	18 – 11
90387–068H4	22 – 11
90387–068P1	6 – 18
90387–068S1	17 – 3
	17 – 7
	19 – 10
90387–08820	28 – 21
90387–08836	8 – 8
90387–107H6	22 – 5
90387–12864	25 – 25

N° PIECES PART NO.	REF. N°
90387–20815	12 – 2
90388–10806	19 – 2
90430–06817	1 – 3
90430–10148	36 – 7
90430–12227	5 – 4
90446–07811	35 – 2
90450–48804	6 – 16
90464–36007	17 – 8
90467–09006	22 – 21
90467–15012	6 – 13
	6 – 15
90480–01817	23 – 12
90480–13398	6 – 5
	23 – 9
90480–15363	33 – 10
90501–10245	27 – 9
	28 – 11
90506–12001	25 – 12
	26 – 12
90506–15001	25 – 13
	26 – 13
90506–28800	28 – 18
90506–35816	28 – 5
90508–32805	15 – 6
90508–35800	28 – 7
90560–12138	25 – 2
90560–15136	26 – 2
91312–05010	13 – 5
91312–06012	4 – 14
91312–06014	29 – 4
91312–06016	11 – 10
91312–06025	6 – 3
	29 – 3
91312–08030	11 – 12
91401–20012	26 – 32
	28 – 9
91402–30030	28 – 3
91810–14804	1 – 14
91830–21014	9 – 3
	10 – 3
	10 – 14
92902–06200	28 – 10
92902–08200	24 – 7
	26 – 30
	28 – 26
	28 – 30
92902–08600	32 – 13
92902–10200	25 – 27

N° PIECES PART NO.	REF. N°
93102–12809	15 – 4
93102–12877	12 – 22
93102–16800	11 – 13
93102–17815	13 – 17
93102–18802	25 – 4
93105–47801	25 – 22
93106–26801	26 – 21
93210–14812	10 – 5
93210–19809	10 – 19
93210–25813	6 – 2
93306–001YH	13 – 2
93306–054Y5	26 – 20
93306–201Y4	13 – 16
93306–202XT	26 – 3
93306–252YH	26 – 3
93306–253YF	13 – 15
93306–253YG	13 – 3
93306–301XN	25 – 3
93306–304YU	2 – 2
93410–20809	13 – 14
93450–14088	2 – 5
93604–10011	1 – 15
	14 – 3
93608–43238	15 – 8
93816–14831	13 – 18
94127–17815	25 – 7
94130–17804	26 – 7
94227–17807	25 – 8
	26 – 8
94568–G3086	4 – 6
94568–J0113	26 – 41
94668–J0001	26 – 42
94703–00894	1 – 12
95022–06010	1 – 2
	13 – 20
95022–06016	3 – 13
95022–06020	4 – 12
95022–06025	1 – 7
	6 – 4
95022–06035	10 – 15
95022–06045	9 – 5
	10 – 7
	10 – 16
95022–06055	9 – 4
	10 – 8
	10 – 17
95022–08055	20 – 18
95022–10014	20 – 1

www.seacubemoto.com

N° PIECES PART NO.	REF. N°
95302–08600	26 – 35
95302–08700	26 – 31
95307–06600	25 – 20
	26 – 17
95602–08200	28 – 22
95602–10200	25 – 28
95602–12200	19 – 4
95612–08620	1 – 4
95702–06500	34 – 5
	34 – 10
95702–08500	8 – 6
	16 – 5
	16 – 7
95702–12500	12 – 5
	29 – 6
95707–06300	33 – 8
95802–06012	6 – 17
95802–06016	10 – 10
95812–06014	8 – 3
	18 – 10
	22 – 13
	24 – 3
95812–06016	17 – 2
95812–06035	22 – 7
95812–08016	24 – 6
95812–08020	28 – 24
	28 – 28
95812–08045	8 – 7
95812–08050	28 – 25
	28 – 29
95822–06012	17 – 6
	19 – 9
	20 – 21
	27 – 6
	31 – 8
	35 – 5
	36 – 10
95822–06025	22 – 12
95822–08014	19 – 15
	19 – 17
9700N–08030	32 – 12
97012–06020	15 – 10
97502–05520	36 – 2
97507–06425	34 – 6
	34 – 11
97602–04110	7 – 3
97602–04116	7 – 20
97701–06020	33 – 6

N° PIECES PART NO.	REF. N°
97702–50016	33 – 12
97702–50025	6 – 11
97707–50016	23 – 17
98502–05020	27 – 16
98902–04008	31 – 2
99001–10600	15 – 7
99009–13400	11 – 3

N° PIECES PART NO.	REF. N°

N° PIECES PART NO.	REF. N°

N° PIECES PART NO.	REF. N°

N° PIECES PART NO.	REF. N°

www.seacubemoto.com