YAMAHA

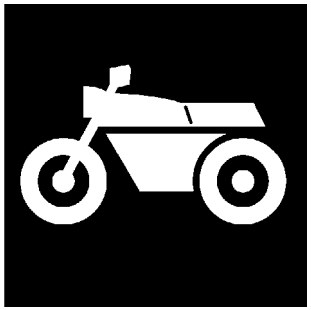

PARTS CATALOGUE
CATALOGO DE REPUESTOS

www.seacubemoto.com

YBR125ED (1NC1) ARGENTINA

1L1NC-276S1

( )

YAMAHA GENUINE Parts & Accessories

www.seacubemoto.com

YBR125ED
CATALOGO DE REPUESTOS
©2011 por Yamaha Motor Co., Ltd.
1ª edición, noviembre 2011
Todos los derechos reservados.
Toda reproducción o uso no autorizado
sin el consentimiento escrito de
Yamaha Motor Co., Ltd.
quedan expresamente prohibidos
Impreso en Japón.

YBR125ED
PARTS CATALOGUE
©2011 by Yamaha Motor Co., Ltd.
1st edition, November 2011
All rights reserved.
Any reprinting or unauthorized use
without the written permission of
Yamaha Motor Co., Ltd.
is expressly prohibited.
Printed in Japan.

SEA CUBE
ONE-STOP PARTS SOLUTION

PROLOGO

Este catálogo de repuestos corresponde a las piezas para el o los modelos que figuran en la página de portada. Al formular el pedido de repuestos, se ruega citar este catálogo y especificar correctamente el número y el nombre de las piezas.

1. Las modificaciones y agregados que se hayan realizado después de la edición de este Catálogo de Repuestos, serán anunciados en las Informaciones de Recambios.
   Es recomendable que se hagan las correcciones necesarias en el Catálogo de Repuestos de acuerdo con las Informaciones de Recambios.

2. Abreviaciones
   En este. Catálogo de Repuestos se emplean las siguientes abreviaciones.

   “UR” Usar el número de partes especificado
   “UN” Usar la cantidad necesaria
   “AP” Piezas sustitutivas
   “LM” Fabricación local (Hay que pedir los repuestos en las cercanías)
   “F#” Nº de bastidor (Nº aplicable a la máquina)
   “O/S” Sobredimensionado

3. La cantidad de componentes para el montaje
   - Los componentes, suministrados como conjunto, se describen con un punto (.) que precede al nombre del parte como se indica a continuación.
   - La numeración que aparece a la derecha de cada descripción indica la cantidad de partes por cada unidad de conjunto.

CODIGO Nº	DESCRIPCION	CANT.	OBSERVACIONES
2F5–83310–60	ENSAMBLAJE DE LA LUZ	2	
115–83311–60	.BOMBILLA (6V–18W)	1	

4. Los colores de los componentes se indican como sigue en la columna de “OBSERVACIONES”.

CODIGO Nº	DESCRIPCION	CANT.	OBSERVACIONES
2N4–24110–00–X5	COMP. DEL TANQUE	2	MXR
3J1–24240–10	.GRAFICO, DEL TANQUE	1	PARA MXR

5. Debe tenerse en cuenta que las ilustraciones sirven como guia para la búsqueda de los números de partes y no deben usarse para el montaje. Durante el montaje, se recomienda usar el manual de taller correspondiente.

6. EL asterisco (*) antes del número de referencia indica los elementos modificados pués de la primera edición.

www.seacubemoto.com

SEACUBE
ONE-STOP PARTS SOLUTION

FOREWORD

This Parts Catalogue is related to the parts for the model(s) on the cover page. When you are ordering replacement parts, please refer to this Parts Catalogue and quote both part numbers and part names correctly.

1. Modifications or additions which have been made after the issue of the Parts Catalogue will be announced in the Parts News.
   It is advisable that you make the necessary corrections to the Parts Catalogue according to the Parts News.

2. Abbreviations
   The following abbreviations are used in this Parts Catalogue.

   “UR” Use specified parts number.
   “UN” Use as many as needed.
   “AP” Alternate Parts
   “LM” Locally Made (Parts need to be ordered locally)
   “F#” Frame No. (Applicable machine No.)
   “O/S” Over Size

3. The number of components for assembly
   - Parts, which are to be supplied in an assembly, are listed with a dot (.) in front of the part name as shown below.
   - The numeral appearing to the right of each component part indicates the quantity of parts for each assembly unit.

PART NO.	DESCRIPTION	Q’TY	REMARKS
2F5–83310–60	FRONT FLASHER LIGHT ASSY	2	
115–83311–60	.BULB (6V–18W)	1	

4. Applicable colours of graphics are represented in the “REMARKS” as shown below.

PART NO.	DESCRIPTION	Q’TY	REMARKS
2N4–24110–00–X5	FUEL TANK COMP.	2	MXR
3J1–24240–10	.GRAPHIC, FUEL TANK	1	FOR MXR

5. Note that the illustrations for reference in finding parts numbers are not to be used for assembling. When assembling, please use the applicable service manual.

6. The asterisk (*) before a reference number indicates modified items after the first ed

www.seacubemoto.com

SEACUBE
ONE-STOP PARTS SOLUTION

7. Números de serie

Nº de Serie del bastidor

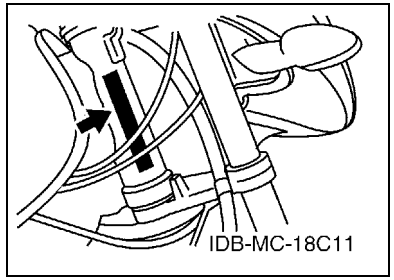

Nº de Serie del motor

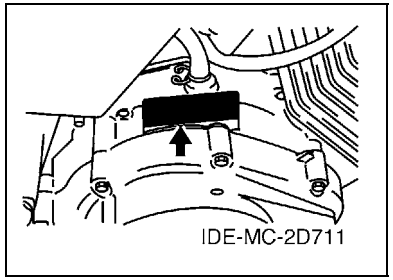

8. Códigos de color aplicables (El símbolo (*) muestra el color de modelo.)

Abreviatura	Nombre de color	Código de color
BMC(*)	BLUE METALLIC C	0775
DBNM8(*)	DARK BLUISH GRAY METALLIC 8	0919
SMX	BLACK METALLIC X	0903
VRC7(*)	VIVID RED COCKTAIL 7	0580
YB	YAMAHA BLACK	0033

9. Nº de serie inicial aplicable

Nº de Serie del bastidor

Nº de serie	Nombre de la columna de cantidades	Código de Modelo

Nº de Serie del motor

Nº de serie	Nombre de la columna de cantidades	Código de Modelo

www.seacubemoto.com

SEACUBE
ONE-STOP PARTS SOLUTION

7. Applicable Serial No.

Frame Serial No.

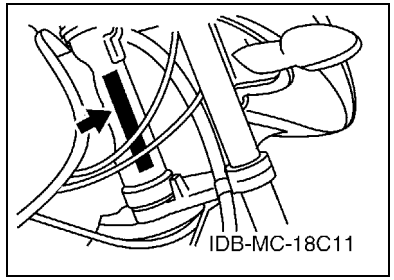

Engine Serial No.

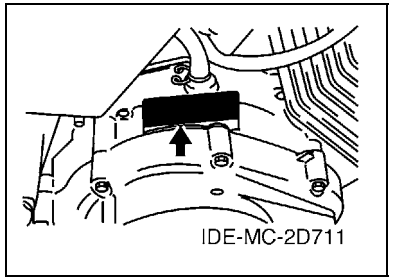

8. Applicable Colour Code (The (*) mark shows Model colour.)

Abbreviation	Colour Name	Colour Code
BMC(*)	BLUE METALLIC C	0775
DBNM8(*)	DARK BLUISH GRAY METALLIC 8	0919
SMX	BLACK METALLIC X	0903
VRC7(*)	VIVID RED COCKTAIL 7	0580
YB	YAMAHA BLACK	0033

9. Applicable Starting Serial No.

Frame Serial No.

Serial No.	Name Of Q'ty Column	Model Code

Engine Serial No.

Serial No.	Name Of Q'ty Column	Model Code

www.seacubemoto.com

SEACUBE ONE-STOP PARTS SOLUTION

CONTENIDO

MOTOR

CILINDRO 1
CIGUENAL & PISTON 2
VALVULA 3
ARBOL DE LEVAS & CADENA 4
BOMBA DE ACEITE 5
ADMISION 6
CARBURADOR 7
DESCARGA 8
CARTER 9
CUBIERTA DE CARTER 1 10
ARRANQUE 11
EMBRAGUE DEL ARRANQUE 12
EMBRAGUE 13
TRANSMISION 14
LEVA DE CAMBIO & HORQUILLA 16
EJE DE CAMBIO & PEDAL 17

SHASIS

CUADRO 18
GUARDABARRO 19
CUBIERTA LATERAL 20
BRAZO TRASERO & SUSPENSION 21
DIRECCION 22
HORQUILLA DELANTERA 23
DEPOSITO DE COMBUSTIBLE 25
ASIENTO 28
RUEDA DELANTERA 29
CALIBRE FRENO DELANTERA 30
RUEDA TRASERA 31
MANILLAR & CABLE 33
CILINDRO MAESTRO DELANTERO 34
SOPORTE & APOYAPIE 35
GENERADOR 37
MOTOR DE ARRANQUE 38
LUZ DE DESTELLADOR 39
MEDIDOR 40
FARO DELANTERO 41
LUZ DE COLA 42
INTERRUPTOR DE MANILLAR&PALANC 43
EQUIPO ELECTRICO 1 44
EQUIPO ELECTRICO 2 45

INDICE

INDICE NUMERICO 46

www.seacubemoto.com

SEACUBE
ONE-STOP PARTS SOLUTION

CONTENTS

ENGINE

CYLINDER 1
CRANKSHAFT & PISTON 2
VALVE 3
CAMSHAFT & CHAIN 4
OIL PUMP 5
INTAKE 6
CARBURETOR 7
EXHAUST 8
CRANKCASE 9
CRANKCASE COVER 1 10
STARTER 11
STARTER CLUTCH 12
CLUTCH 13
TRANSMISSION 14
SHIFT CAM & FORK 16
SHIFT SHAFT 17

CHASSIS

FRAME 18
FENDER 19
SIDE COVER 20
REAR ARM & SUSPENSION 21
STEERING 22
FRONT FORK 23
FUEL TANK 25
SEAT 28
FRONT WHEEL 29
FRONT BRAKE CALIPER 30
REAR WHEEL 31
STEERING HANDLE & CABLE 33
FRONT MASTER CYLINDER 34
STAND & FOOTREST 35
GENERATOR 37
STARTING MOTOR 38
FLASHER LIGHT 39
METER 40
HEADLIGHT 41
TAILLIGHT 42
HANDLE SWITCH & LEVER 43
ELECTRICAL 1 44
ELECTRICAL 2 45

INDEX

NUMERICAL INDEX 46

www.seacubemoto.com

SEACUBE
ONE-STOP PARTS SOLUTION

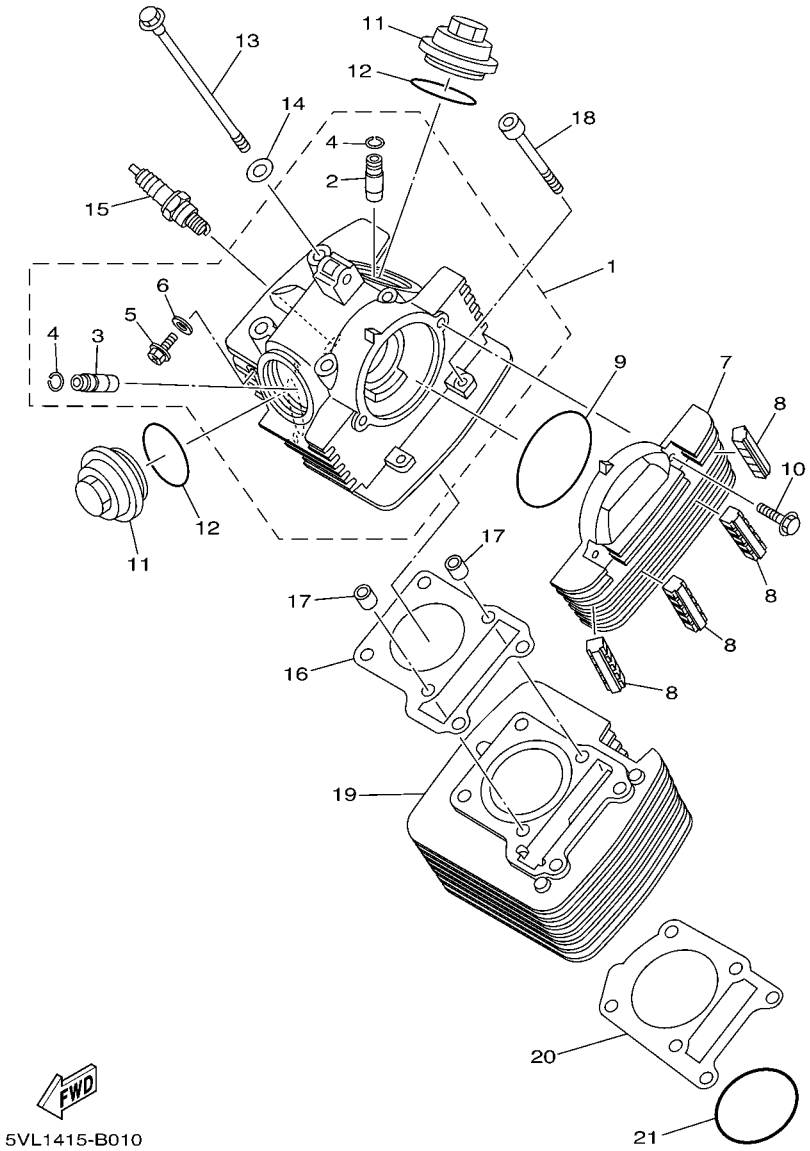

FIG. 1 CILINDRO — CYLINDER

REF. Nº	CODIGO Nº PART NO.	DESCRIPCION DESCRIPTION	1NC1					OBSERV REMARK
1	5VL–E1111–01	CULATA CILINDRO 1 HEAD, CYLINDER 1	1					
2	2UJ–11133–10	.GUIA DE VALVULA 1 .GUIDE, VALVE 1	1					
3	22F–11134–10	.GUIA DE VALVULA 2 .GUIDE, VALVE 2	1					
4	93440–10109	.SEGURO .CIRCLIP	2					
5	90153–06803	.TORNILLO HEXAGONAL .SCREW, HEXAGON	1					
6	90430–06817	.JUNTA .GASKET	1					
7	5VL–E1185–00	CUBIERTA CULATA CIL.LAT.3 COVER, CYLINDER HEAD SIDE 3	1					
8	5VL–E1161–00	AMORTIGUADOR 1 ABSORBER 1	4					
9	93210–71801	ANILLO O O-RING	1					
10	95022–06020	PERNO, DE BRIDA BOLT, FLANGE	2					
11	5VL–E1186–00	CUBIERTA CULATA CIL.LAT.2 COVER, CYLINDER HEAD SIDE 2	2					
12	93210–44889	ANILLO O O-RING	2					
13	90105–08724	TORNILLO BOLT, FLANGE	4					
14	90201–088C3	ARANDELA PLANA WASHER, PLATE	4					
15	94700–00869	BUJIA (NGK CR6HSA) PLUG SPARK (NGK CR6HSA)	1					
16	5VL–E1181–00	JUNTA, DE CULATA 1 GASKET, CYLINDER HEAD 1	1					
17	99530–10114	PASADOR, DE ESPIGA PIN, DOWEL	2					
18	91312–06090	TORNILLO BOLT	2					
19	5VL–E1310–00	CILINDRO CYLINDER	1					
20	5VL–E1351–10	JUNTA, DE CILINDRO GASKET, CYLINDER	1					
21	93210–57897	ANILLO O O-RING	1					

www.seaquetoto.com

SEAQUEBE ONE-STOP PARTS SOLUTION

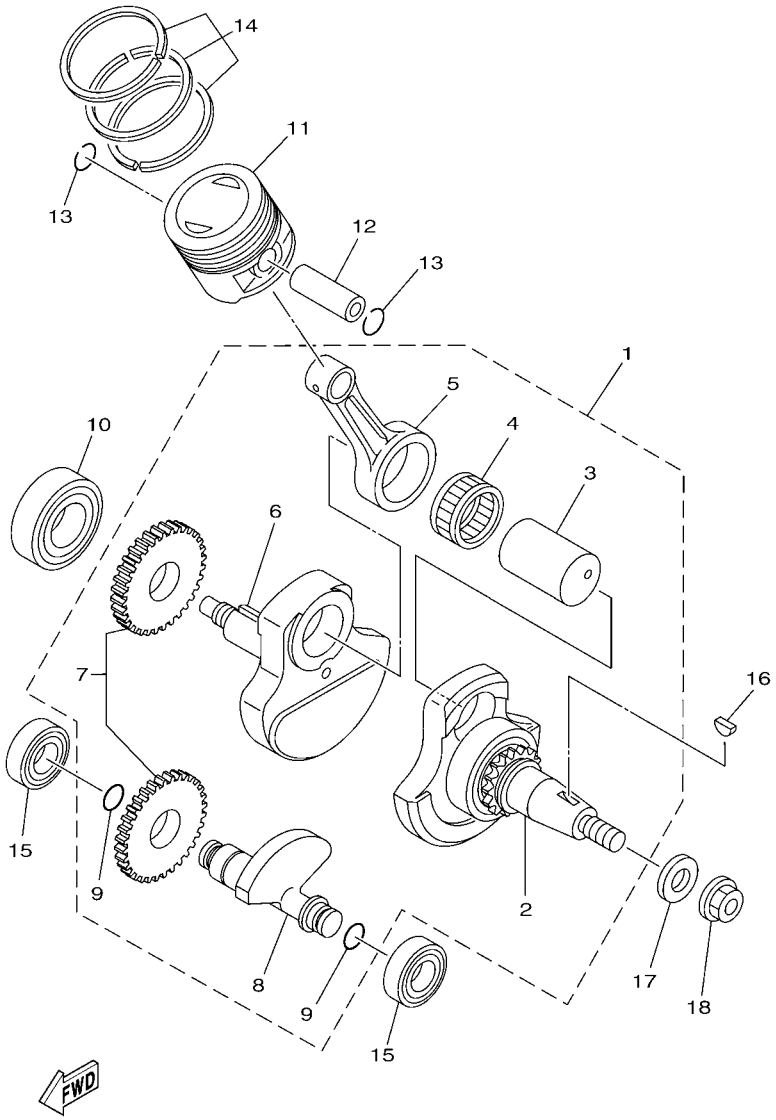

2D0S415-H020

FIG. 2 CIGUENAL & PISTON — CRANKSHAFT & PISTON

REF. Nº	CODIGO Nº PART NO.	DESCRIPCION DESCRIPTION	1NC1					OBSERV REMARK
1	2D0–W1140–00	CIGUENAL COMPLETO CRANKSHAFT ASSY	1					
2	2D0–W1141–00	.MANIVELA SEMI-ARMADA 1 .CRANK SUB ASSY 1	1					
3	5VL–E1681–00	.PASADOR MANIVELA 1 .PIN, CRANK 1	1					
4	93310–629Y3	.COJINETE DE RODILLOS .BEARING	1					
5	5VL–E1651–00	.BIELA .ROD, CONNECTING	1					
6	5VL–E1422–00	.MANIVELA 2 .CRANK 2	1					
7	5VL–Y1153–00	.ENGRANAJE TRACCION .GEAR, BALANCE WEIGHT ASSY.	1					
8	5VL–E1454–00	.PESO 1 .WEIGHT 1	1					
9	93210–11800	.ANILLO O .O-RING	2					
10	93306–205XJ	COJINETE BEARING	1					
11	5VL–E1631–00	PISTON (NORMA) PISTON (STD)	1					
12	5VL–E1633–00	PASADOR, PISTON PIN, PISTON	1					
13	93450–16812	SEGURO CIRCLIP	2					
14	5VL–W1161–00	JUEGO DE AROS (NORMA) PISTON RING SET (STD)	1					
15	93306–202XN	COJINETE BEARING	2					
16	90280–03017	CUNA WOODRUFF KEY, WOODRUFF	1					
17	90201–122H1	ARANDELA PLANA WASHER, PLATE	1					
18	90179–12863	TUERCA NUT	1					

www.seacubemoto.com

SEACUBE ONE-STOP PARTS SOLUTION

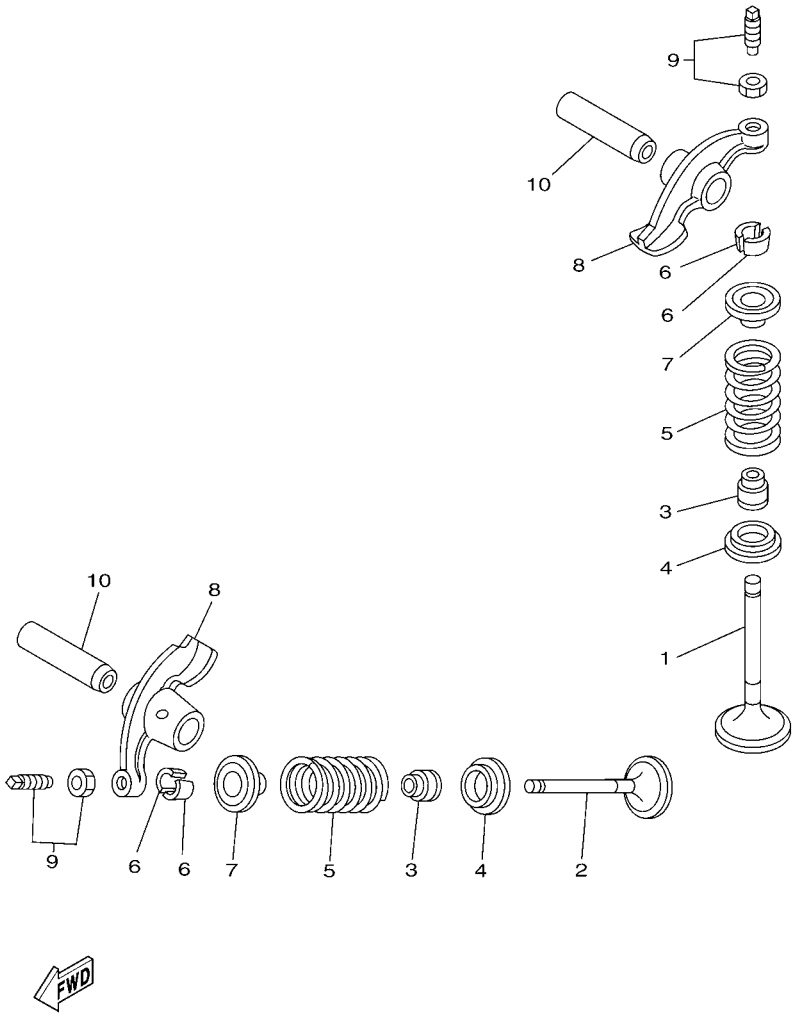

FIG. 3 VALVULA VALVE

REF. Nº	CODIGO Nº PART NO.	DESCRIPCION DESCRIPTION	1NC1					OBSERV REMARK
1	5VL–E2111–00	VALVULA DE ADMISION VALVE, INTAKE	1					
2	5VL–E2121–00	VALVULA DE ESCAPE VALVE, EXHAUST	1					
3	5VL–E2119–00	SELLO DE ACEITE VALVULA SEAL, VALVE STEM	2					
4	5VL–E2116–00	ASIENTO RESORTE DE VALVULA SEAT, VALVE SPRING	2					
5	5KA–12113–00	RESORTE VALVULA INTERNA SPRING, VALVE INNER	2					
6	5VL–E2118–00	SEGURO DE VALVULA COTTER, VALVE	4					
7	5VL–E2117–01	RETEN RESORTE DE VALVULA RETAINER, VALVE SPRING	2					
8	5VL–E2151–00	BRAZO DE BALANCIN DE VALVULA ARM, VALVE ROCKER	2					
9	5VL–Y1215–00	TORNILLO DE AJUSTE DE VALVULA SCREW, VALVE ADJUSTING	2					
10	5VL–E2156–00	EJE DE BALANCIN SHAFT, ROCKER 2	2					

www.seacubemoto.com

SEA CUBE
ONE-STOP PARTS SOLUTION

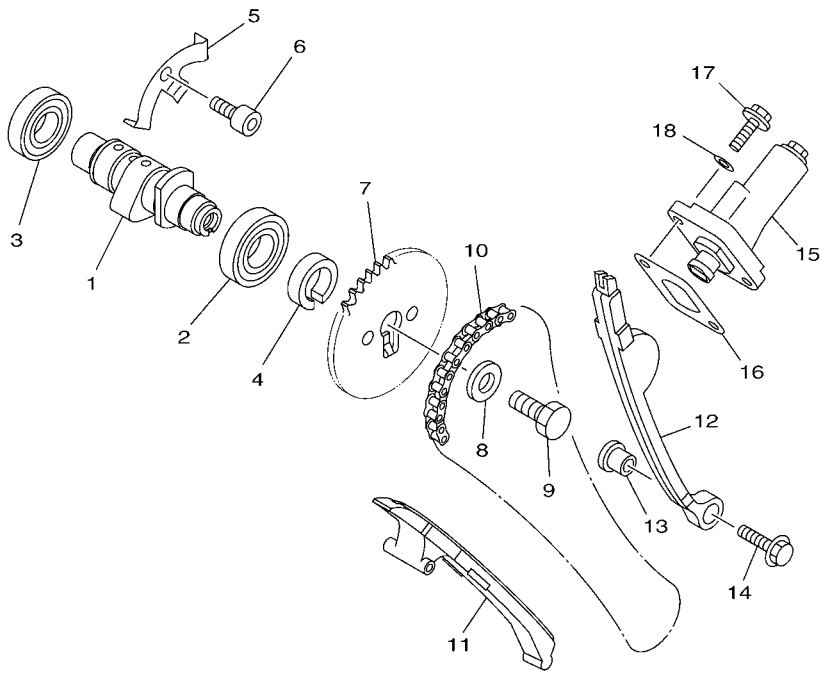

5VL1415-B041

FIG. 4 ARBOL DE LEVAS & CADENA CAMSHAFT & CHAIN

REF. Nº	CODIGO Nº PART NO.	DESCRIPCION DESCRIPTION	1NC1					OBSERV REMARK
1	5VL–E2171–00	ARBOL DE LEVAS 1 CAMSHAFT 1	1					
2	93306–003X6	COJINETE BEARING	1					
3	93306–002YU	COJINETE BEARING	1					
4	90387–167L5	ESPACIADOR COLLAR	1					
5	5VL–E111F–00	PLACA PLATE	1					
6	91312–06012	TORNILLO BOLT	1					
7	5VL–E2176–00	CATALINA DE CADENA (34T) SPROCKET, CAM CHAIN (34T)	1					
8	90201–08326	ARANDELA PLANA WASHER, PLATE	1					
9	90101–08820	TORNILLO BOLT	1					
10	94568–C1088	CADENA CHAIN	1					
11	5VL–E2231–00	TOPE DE GUIA 1 GUIDE, STOPPER 1	1					
12	5VL–E2241–00	TOPE DE GUIA 2 GUIDE, STOPPER 2	1					
13	5VL–E5598–00	COLLAR COLLAR	1					
14	95802–06020	TORNILLO DE REBORDE BOLT, FLANGE	1					
15	5VL–E2210–01	TENSOR CADENA DE LEVA TENSIONER ASSY, CAM CHAIN	1					
16	5VL–E2213–10	EMPAQUE DE CAJA TENSOR GASKET, TENSIONER CASE	1					
17	95022–06016	PERNO, DE BRIDA BOLT, FLANGE	2					
18	90430–06817	JUNTA GASKET	2					

www.spacubertoto.com

SEA LUBE
ONE-STOP PARTS SOLUTION

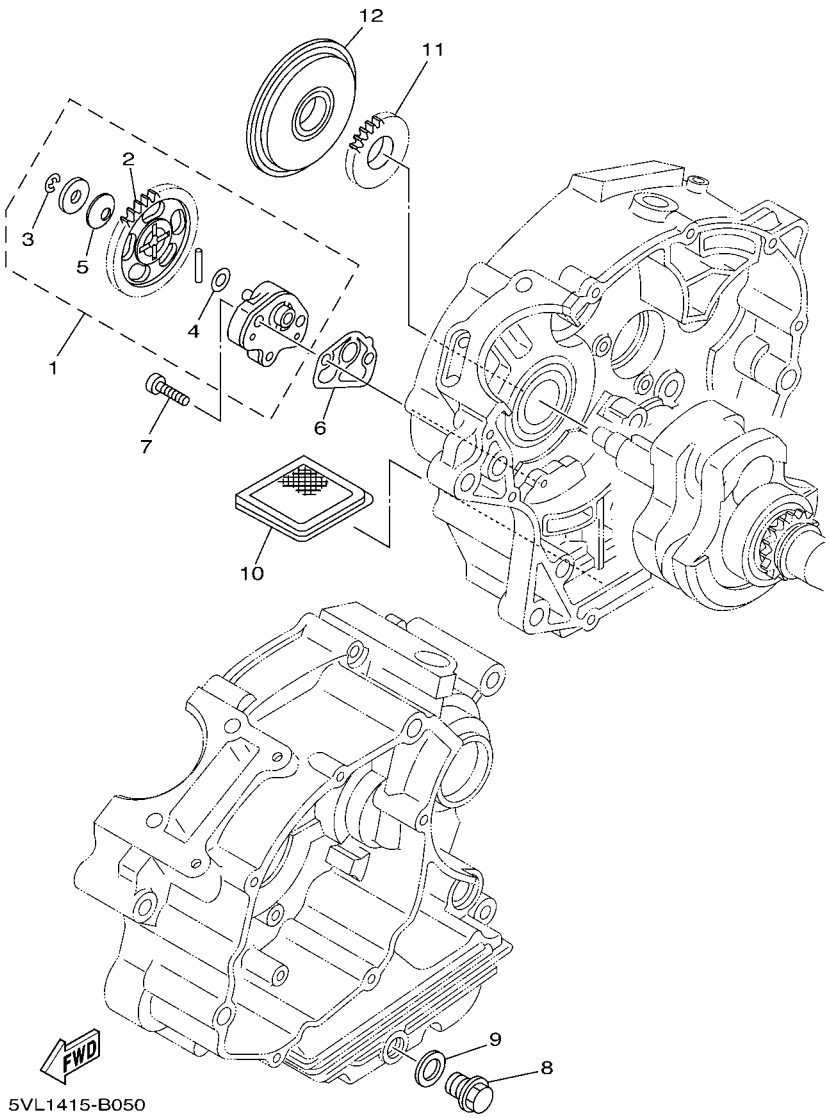

FIG. 5 BOMBA DE ACEITE OIL PUMP

REF. Nº	CODIGO Nº PART NO.	DESCRIPCION DESCRIPTION	1NC1					OBSERV REMARK
1	5VL–E3300–01	BOMBA DE ACEITE COMPLETA OIL PUMP ASSY	1					
2	5VL–E3325–00	.ENGRANAJE IMPULSOR DE BOMBA 1 .GEAR, PUMP DRIVEN	1					
3	99002–05600	.PRESILLA REDONDA .CLIP	1					
4	90201–07641	.ARANDELA PLANA .WASHER, PLATE	1					
5	90208–07052	.ARANDELA DE RESORTE CONICO .WASHER, CONICAL SPRING	1					
6	5VL–E3329–00	EMPAQUE TAPA DE BOMBA GASKET, PUMP COVER	1					
7	90155–06800	TORNILLO CABEZA PLANA RAN. SCREW, FLAT FILLISTER	2					
8	90340–12097	TORNILLO, DE DRENAJE PLUG, STRAIGHT SCREW	1					
9	90430–12227	JUNTA GASKET	1					
10	4FP–E3411–00	FILTRO DE ACEITE STRAINER, OIL	1					
11	5VL–E3324–00	ENGRANAJE TRACC. DE BOMBA GEAR, PUMP DRIVE	1					
12	5VL–E3451–00	FILTRE ROTATIVO FILTER,ROTARY	1					

www.spacubemoto.com

SPACUBE ONE-STOP PARTS SOLUTION

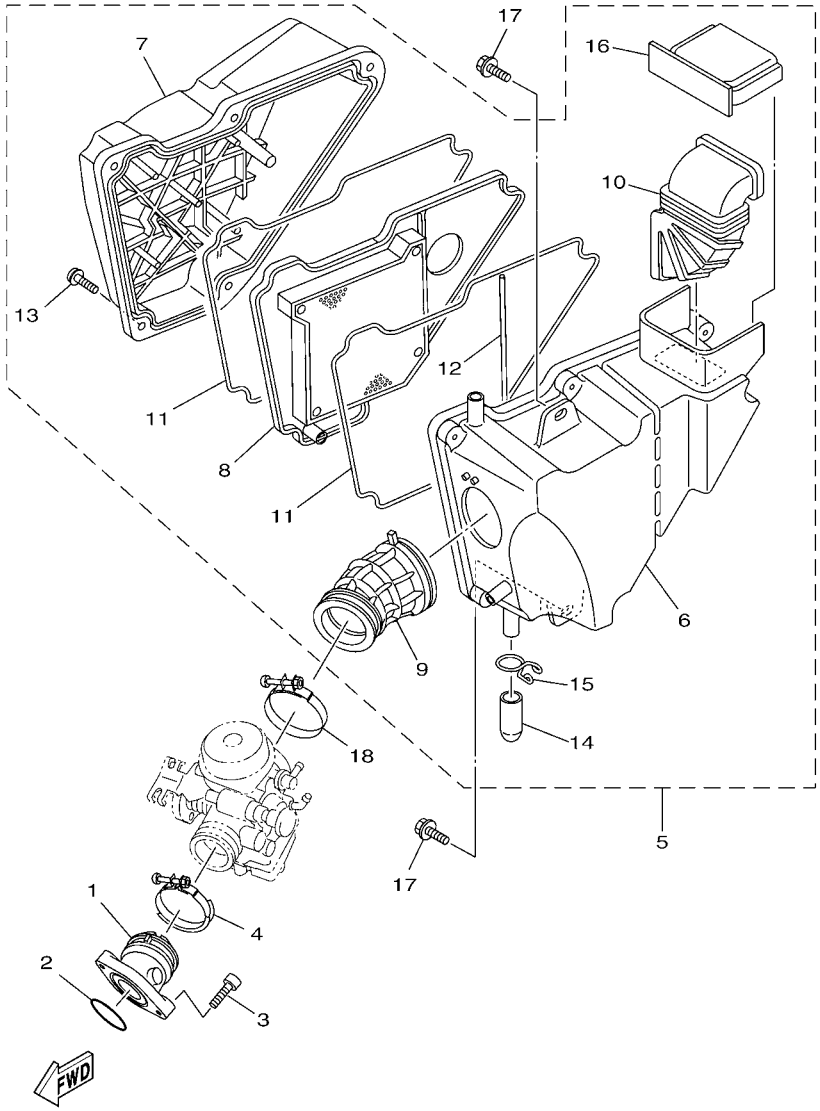

1PX1210-L060

FIG. 6 ADMISION INTAKE

REF. Nº	CODIGO Nº PART NO.	DESCRIPCION DESCRIPTION	1NC1					OBSERV REMARK
1	4P2–E3586–00	TOBERA DE CARBURADOR 1 JOINT, CARBURETOR 1	1					
2	93210–30611	ANILLO O O-RING	1					
3	91312–06025	TORNILLO BOLT	2					
4	90450–44804	BRIDA, MANGUERA HOSE CLAMP ASSY	1					
5	4P2–Y1441–01	FILTRO DE AIRE COMPLETO AIR CLEANER ASSY.	1					
6	5VL–E4411–00	.CAJA FILTRO DEL AIRE 1 .CASE, AIR CLEANER 1	1					
7	5VL–E4412–00	.TAPA CAJA DEL FILTRO 1 .CAP, CLEANER CASE 1	1					
8	5VL–E4450–01	.ELEMENTO COMP.FILTRO DE AIRE .ELEMENT ASSY, AIR CLEANER	1					
9	4P2–E4453–00	.UNION DEL FILTRO DEL AIRE 1 .JOINT, AIR CLEANER 1	1					
10	5VL–E4437–00	.CONDUCTO .DUCT	1					
11	5VL–E4452–00	.SELLO .SEAL	2					
12	5VL–E4462–00	.SELLO .SEAL	1					
13	97602–06220	.TORNILLO CON RONDONA .SCREW, PAN HEAD W/WASHER	5					
14	5VL–E443E–00	.TUBO, DRENAJE .PIPE, DRAIN	1					
15	5VL–E4424–01	.PRESILLA ACCESORIO DE TAPA .CLIP, CAP FITTING	1					
16	5VL–E4417–00	.CUBIERTA 1 .COVER 1	1					
17	90119–06869	TORNILLO CON ARANDELA BOLT, WITH WASHER	2					
18	90450–51802	BRIDA, MANGUERA HOSE CLAMP ASSY	1					

www.seapbmoto.com

SEA PB MOTO
ONE-STOP PARTS SOLUTION

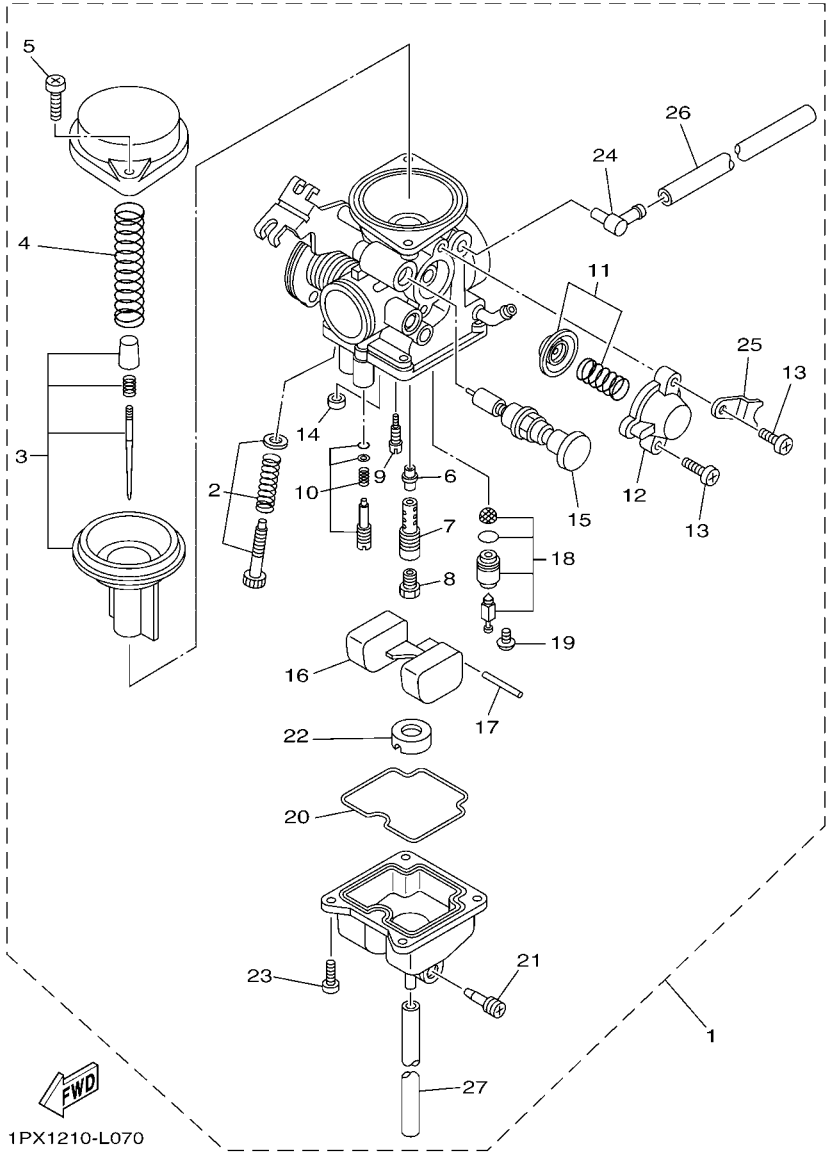

FIG. 7 CARBURADOR CARBURETOR

REF. Nº	CODIGO Nº PART NO.	DESCRIPCION DESCRIPTION	1NC1					OBSERV REMARK
1	1PX–E4301–00	CARBURADOR COMPLETO 1 CARBURETOR ASSY 1	1					
2	4P2–W149K–00	.CJTO. TORNILLO DEL RALENTI .THROTTLE SCREW SET	1					
3	4P2–W149J–00	.CJTO. AGUJA .NEEDLE SET	1					
4	4P2–E4286–00	.RESORTE .SPRING	1					
5	5LB–E4214–00	.TORNILLO DE CABEZA CON PLANA .SCREW, PAN HEAD	2					
6	5RS–E4341–00	.BOQUILLA PRINCIPAL .NOZZLE, MAIN	1					
7	5RS–E4341–10	.BOQUILLA PRINCIPAL .NOZZLE, MAIN	1					
8	288–E4343–60	.INYECTOR PRINCIPAL (#120) .JET, MAIN (#120)	1					
9	5LB–E4342–17	.ESPREA DE PILOTO (# 34) .JET, PILOT (# 34)	1					
10	4P2–W1415–00	.TORNILLO DE PILOTO .PILOT SCREW SET	1					
11	4P2–W149A–00	.CONTROL REMOTO .DIAPHRAGM SET 1	1					
12	5LB–E4293–00	.CUBIERTA .COVER 1	1					
13	97801–04010	.TORNILLO DE MUESCA .SCREW, PAN HEAD	2					
14	50M–E4355–00	.ASIENTO .NOZZLE, MAIN 2	1					
15	4P2–E4371–00	.EMBOLO DE ARRANQUE .PLUNGER, STARTER	1					
16	5LB–E4385–00	.BOIA .FLOAT	1					
17	5LB–E4386–00	.PASADOR DE BOIA .PIN, FLOAT	1					
18	1BV–E4390–00	.VALVULA DE AGUJA COMPLETA .NEEDLE VALVE ASSY	1					
19	30S–14325–00	.TORNILLO CABEZA REDONDA .SCREW, PAN HEAD	1					
20	5LB–E4384–00	.EMPAQUE DE CAMARA DE BOIA .GASKET, FLOAT CHAMBER	1					
21	4JP–E4323–00	.TORNILLO DE AJUSTE DE AIRE .SCREW, AIR ADJUSTING	1					
22	5LB–E4153–00	.PLACA,BAFFLE .PLATE,BAFFLE	1					
23	5LB–E4592–00	.TORNILLO .SCREW	4					
24	5FY–E4251–00	.NIPLE .NIPPLE	1					
25	5LB–E4292–00	.SOPORTE 2 .BRACKET 2	1					
26	4P2–E4197–00	.TUBO RESPIRADERO .PIPE	1					
27	1PX–E4196–00	.TUBO DE DRENASE .PIPE, OVER FLOW 1	1					

www.seaumotor.com

SEA LUBE ONE-STOP PARTS SOLUTION

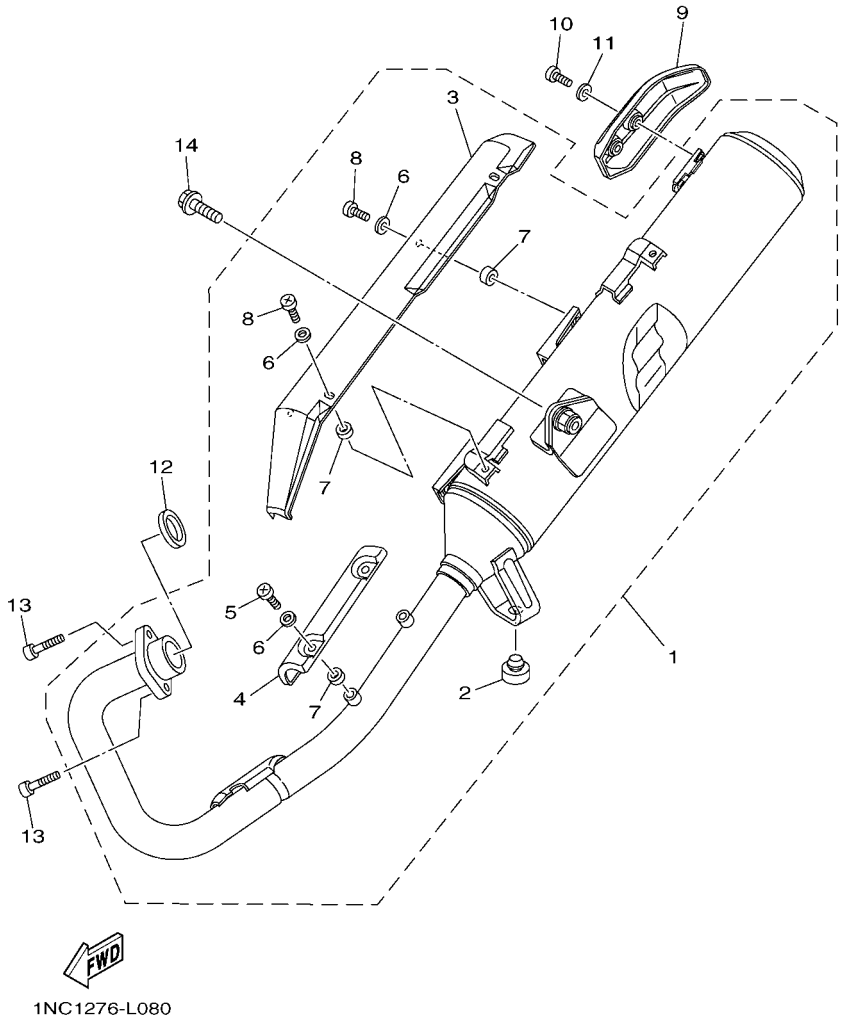

FIG. 8 DESCARGA EXHAUST

REF. Nº	CODIGO Nº PART NO.	DESCRIPCION DESCRIPTION	1NC1					OBSERV REMARK
1	1PX–E4710–00	TUBO DE ESCAPE COMPLETO 1 MUFFLER ASSY 1	1					
2	4TU–F4741–00	.COJIN DE ASIENTO .PAD, SEAT	1					
3	5VL–E4758–00	.PROTECTOR DE SILENCIADOR .PROTECTOR, SILENCER	1					
4	5VL–E4628–00	.PROTECTOR DE TUBO DE ESCAPE .PROTECTOR, EXHAUST PIPE	1					
5	98980–06012	.TORNILLO DE LIGAR .SCREW, BIND	2					
6	90201–05803	.ARANDELA PLANA .WASHER, PLATE	6					
7	90201–05804	.ARANDELA PLANA .WASHER, PLATE	6					
8	98980–06014	.TORNILLO DE LIGAR .SCREW, BIND	4					
9	1PX–E4738–00	PROTECTOR DE SILENCIADOR 3 PROTECTOR, MUFFLER 3	1					
10	98980–06014	TORNILLO DE LIGAR SCREW, BIND	2					
11	92990–06200	ARANDELA PLANA WASHER, PLAIN	2					
12	5VL–E4613–00	JUNTA, TUBO DE ESCAPE GASKET, EXHAUST PIPE	1					
13	91312–06020	TORNILLO BOLT	2					
14	95812–08020	TORNILLO DE REBORDE BOLT, FLANGE	1					

www.spacebemoto.com

SEA LUBE
ONE-STOP PARTS SOLUTION

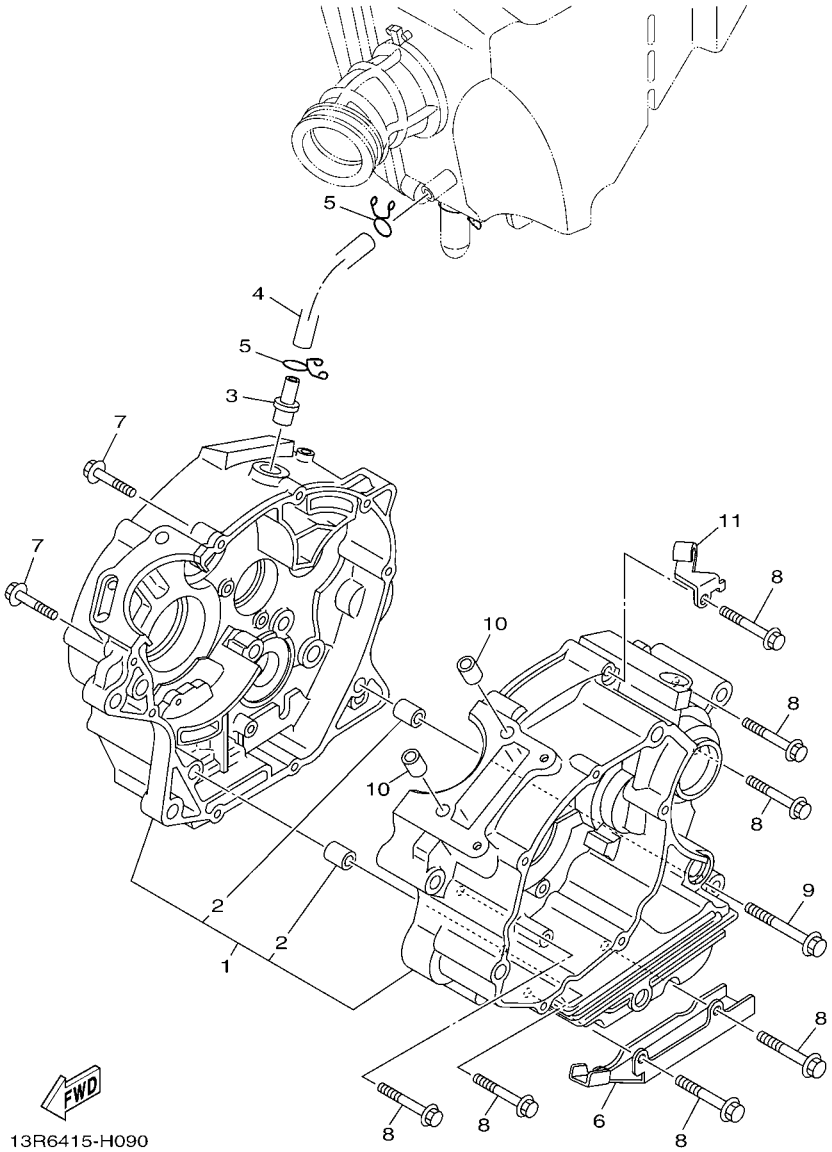

FIG. 9 CARTER — CRANKCASE

REF. Nº	CODIGO Nº PART NO.	DESCRIPCION DESCRIPTION	1NC1					OBSERV REMARK
1	5VL–W1510–11	CARTER COMPLETO CRANKCASE ASSY	1					
2	99530–10114	.PASADOR, DE ESPIGA .PIN, DOWEL	2					
3	4FP–E1167–00	CUBIERTA RESPIRADERO 2 PIPE, BREATHER 2	1					
4	5VL–E1166–00	TUBO RESPIRADERO 1 PIPE, BREATHER 1	1					
5	90467–12828	PRESILLA CLIP	2					
6	90462–16801	BRIDA CLAMP	1					
7	95022–06030	PERNO, DE BRIDA BOLT, FLANGE	2					
8	95022–06045	PERNO, DE BRIDA BOLT, FLANGE	7					
9	95022–06055	PERNO, DE BRIDA BOLT, FLANGE	1					
10	99530–10114	PASADOR, DE ESPIGA PIN, DOWEL	2					
11	5VL–E5441–01	SOSTEN DE CABLE DE EMBRAGUE HOLDER, CLUTCH CABLE	1					

www.seacubemoto.com

SEACUBE ONE-STOP PARTS SOLUTION

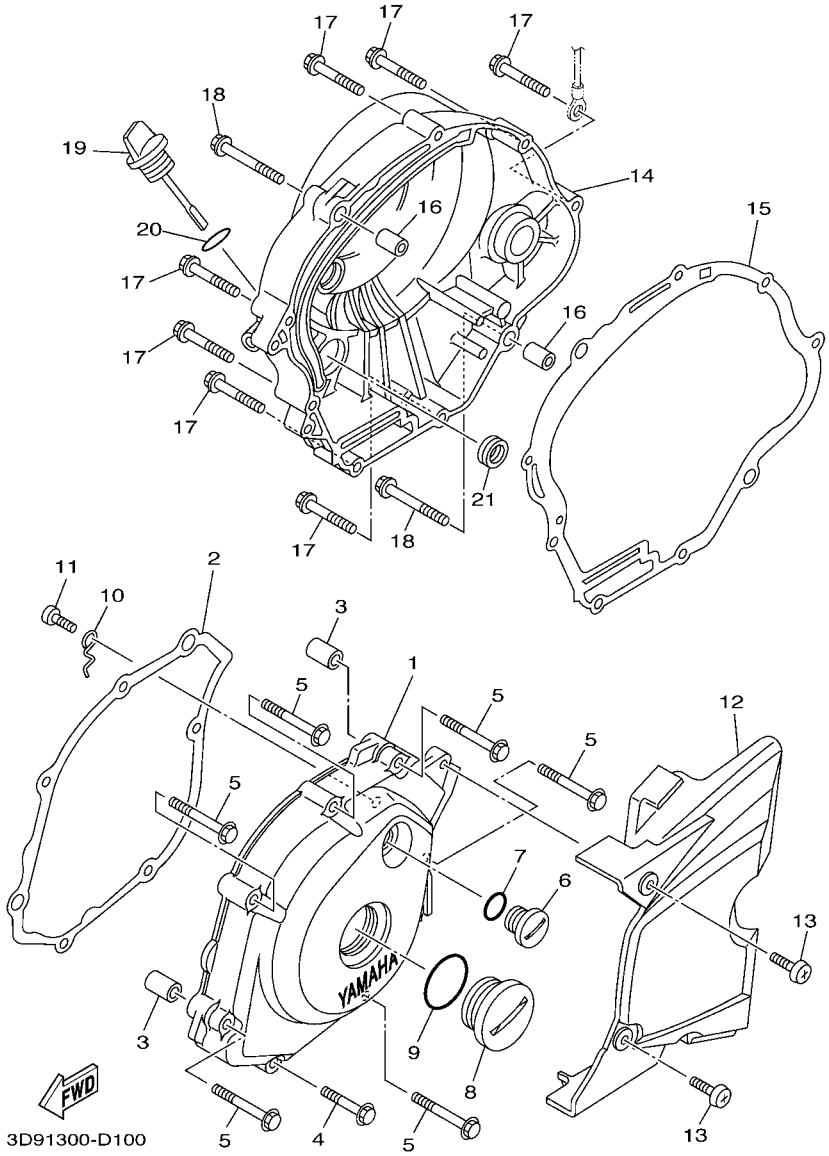

FIG. 10 CUBIERTA DE CARTER 1 CRANKCASE COVER 1

REF. Nº	CODIGO Nº PART NO.	DESCRIPCION DESCRIPTION	1NC1					OBSERV REMARK
1	5VL–E5411–10	CUBIERTA DE CARTER 1 COVER, CRANKCASE 1	1					
2	5VL–E5451–10	EMPAQ DE CUBIERTA DE CARTER GASKET, CRANKCASE COVER 1	1					
3	99530–10114	PASADOR, DE ESPIGA PIN, DOWEL	2					
4	95022–06035	PERNO, DE BRIDA BOLT, FLANGE	1					
5	95022–06050	PERNO, DE BRIDA BOLT, FLANGE	6					
6	90340–14810	TORNILLO, DE DRENAJE PLUG,STRAIGHT SCREW	1					
7	93210–14899	ANILLO O O-RING	1					
8	90340–32812	TORNILLO, DE DRENAJE PLUG,STRAIGHT SCREW	1					
9	93210–328A4	ANILLO O O-RING	1					
10	5VL–E5191–00	PLACA PLATE	1					
11	98512–06010	TORNILLO SCREW, PAN HEAD	1					
12	5VL–E5418–02	CUBIERTA CAJA DE CADENA COVER, CHAIN CASE	1					
13	98902–06016	TORNILLO DE AJUSTE SCREW, BIND	2					
14	5VL–E5421–00	TAPA DE CARTER DERECHA COVER, CRANKCASE 2	1					
15	5VL–E5461–10	JUNTA TAPA CARTER DERECHO 2 GASKET, CRANKCASE COVER 2	1					
16	99530–10114	PASADOR, DE ESPIGA PIN, DOWEL	2					
17	95022–06035	PERNO, DE BRIDA BOLT, FLANGE	7					
18	95022–06045	PERNO, DE BRIDA BOLT, FLANGE	2					
19	5VL–E5362–00	TAPON DEL NIVEL DE ACEITE PLUG, OIL LEVEL	1					
20	93210–19809	ANILLO O O-RING	1					
21	93101–10800	SELLO ACEITE OIL SEAL	1					

www.spbtoto.com

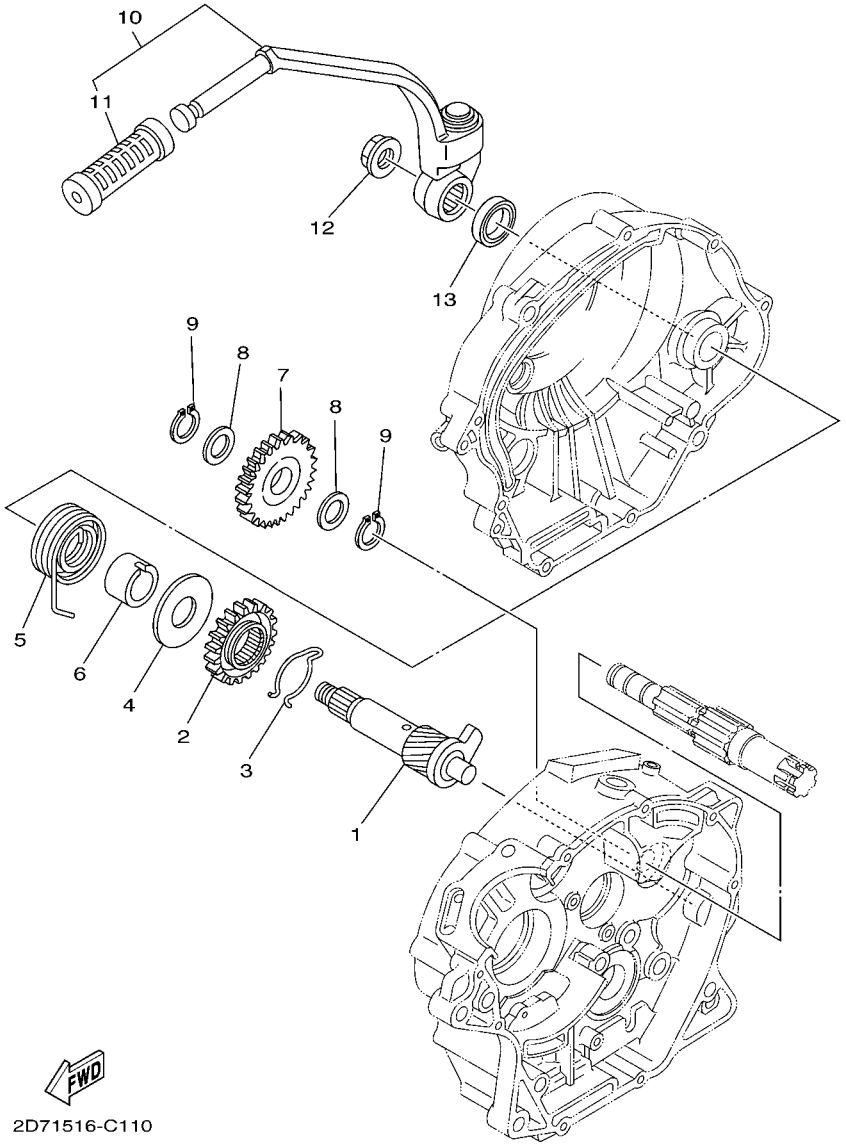

FIG. 11 ARRANQUE STARTER

REF. Nº	CODIGO Nº PART NO.	DESCRIPCION DESCRIPTION	1NC1					OBSERV REMARK
1	5VL–E5660–01	EJE DEL PEDAL DE ARRAN.COMPLET KICK AXLE ASSY	1					
2	4FP–E5641–00	ENGRANAJE PEDAL ARRANQUE GEAR, KICK	1					
3	90468–26813	PRESILLA CLIP	1					
4	90201–208D5	ARANDELA PLANA WASHER, PLATE	1					
5	90508–26836	RESORTE DE TORSION SPRING, TORSION	1					
6	4FP–E5666–00	SEPARADOR SPACER	1					
7	5VL–E5651–00	PINON LIBRE, PEDAL ARRANQUE GEAR, KICK IDLE	1					
8	90201–152H7	ARANDELA PLANA WASHER, PLATE	2					
9	99009–15400	PRESILLA REDONDA CIRCLIP	2					
10	5VL–E5620–01	PEDAL DE ARRANQUE COMPLETO KICK CRANK ASSY	1					
11	47V–E5618–00	.GOMA PROTECTORA, PEDAL .COVER, KICK LEVER	1					
12	90179–12813	TUERCA NUT	1					
13	93109–20806	SELLO ACEITE OIL SEAL	1					

www.seacubemoto.com

SEACUBE ONE-STOP PARTS SOLUTION

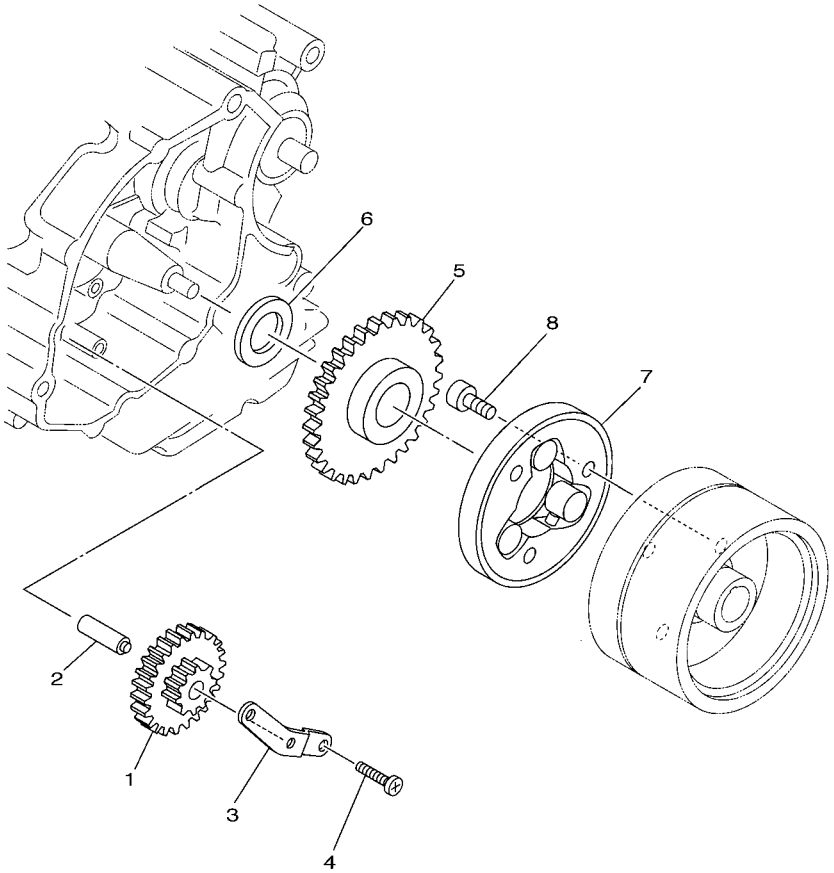

5VL1415-B120

FIG. 12 EMBRAGUE DEL ARRANQUE STARTER CLUTCH

REF. Nº	CODIGO Nº PART NO.	DESCRIPCION DESCRIPTION	1NC1					OBSERV REMARK
1	5VL–E5512–00	ENGRENAJE NEUTRO GEAR, IDLER 1	1					
2	5VL–E5521–00	EJE 1 SHAFT 1	1					
3	5VL–E5532–00	PLACA DE ENGRENAJE NEUTRO PLATE, IDLE GEAR	1					
4	98512–06012	TORNILLO SCREW, PAN HEAD	2					
5	5VL–E5517–00	ENGRENAJE POSICION 2DA GEAR, IDLER 2	1					
6	90201–258D7	ARANDELA PLANA WASHER, PLATE	1					
7	4FP–E5580–00	ENSAMBLE EXT.EMBRAGUE ARRANQUE STARTER CLUTCH OUTER ASSY	1					
8	91312–08016	TORNILLO BOLT	3					

www.seacubemoto.com

SEACUBE
ONE-STOP PARTS SOLUTION

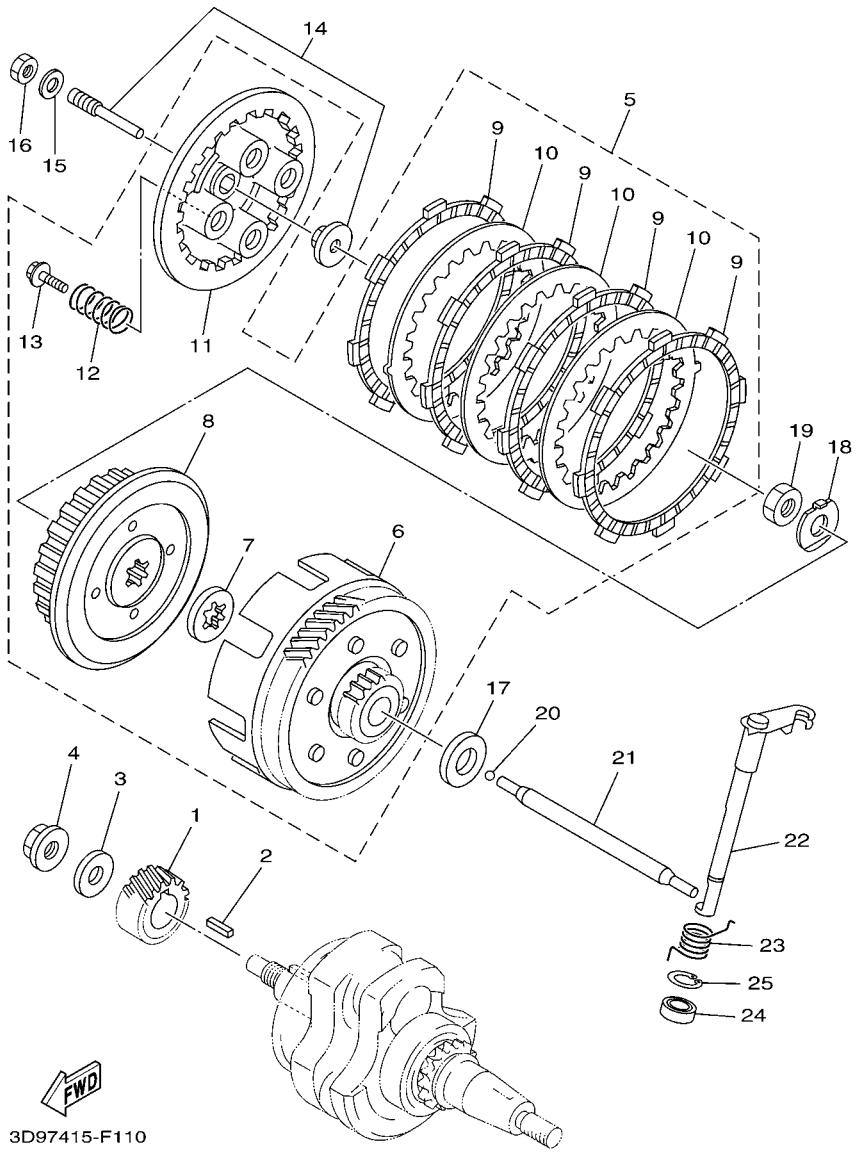

FIG. 13 EMBRAGUE CLUTCH

REF. Nº	CODIGO Nº PART NO.	DESCRIPCION DESCRIPTION	1NC1					OBSERV REMARK
1	5VL–E6111–00	ENGRANAJE TRACC.PRIMARIA GEAR, PRIMARY DRIVE	1					
2	90282–05001	CHAVETA, RECTA (5MMX16MM) KEY, STRAIGHT (5MMX16MM)	1					
3	90201–122H1	ARANDELA PLANA WASHER, PLATE	1					
4	90179–12813	TUERCA NUT	1					
5	5VL–E6300–10	EMBRAGUE COMPLETO CLUTCH ASSY	1					
6	5VL–E6150–00	.CAMPANA DE EMBRAGUE .PRIMARY DRIVEN GEAR COMP.	1					
7	5VL–E6154–00	.ARANDELA, DE EMPUJE 1 .PLATE, THRUST 1	1					
8	5VL–E6371–10	.CUBO, DE EMBRAGUE .BOSS, CLUTCH	1					
9	5VL–E6321–10	.PLACA DE FRICCION .PLATE, FRICTION	4					
10	5VL–E6324–00	.PLACA DE EMBRAGUE .PLATE, CLUTCH 1	3					
11	5VL–E6351–00	.PLATO DE PRESION .PLATE, PRESSURE 1	1					
12	5VL–E6333–10	.RESORTE DE EMBRAGUE 1 .SPRING, CLUTCH 1	4					
13	5VL–E6337–00	.TORNILLO DE RESORTE .SCREW, SPRING	4					
14	5VL–Y1635–10	CONJ. PALANCA DE EMPUJE PUSH LEVER COMP.	1					
15	92902–06200	ARANDELA WASHER	1					
16	95302–06600	TUERCA NUT	1					
17	5VL–E6164–10	PLACA DE EMPUJE 2 PLATE, THRUST 2	1					
18	90215–12211	ARANDELA DE CIERRE WASHER, LOCK	1					
19	90170–12060	TUERCA NUT	1					
20	93503–16824	ESFERA BALL	1					
21	5VL–E6357–01	VARILLA DE EMPUJE 2 ROD, PUSH 2	1					
22	5VL–E6381–02	CONJ. PALANCA DE EMPUJE PUSH LEVER COMP.	1					
23	90508–16800	RESORTE DE TORSION SPRING, TORSION	1					
24	93102–12802	SELLO ACEITE OIL SEAL	1					
25	99009–20500	PRESILLA REDONDA CIRCLIP	1					

www.spvbemdo.com

SEA LUBE ONE-STOP PARTS SOLUTION

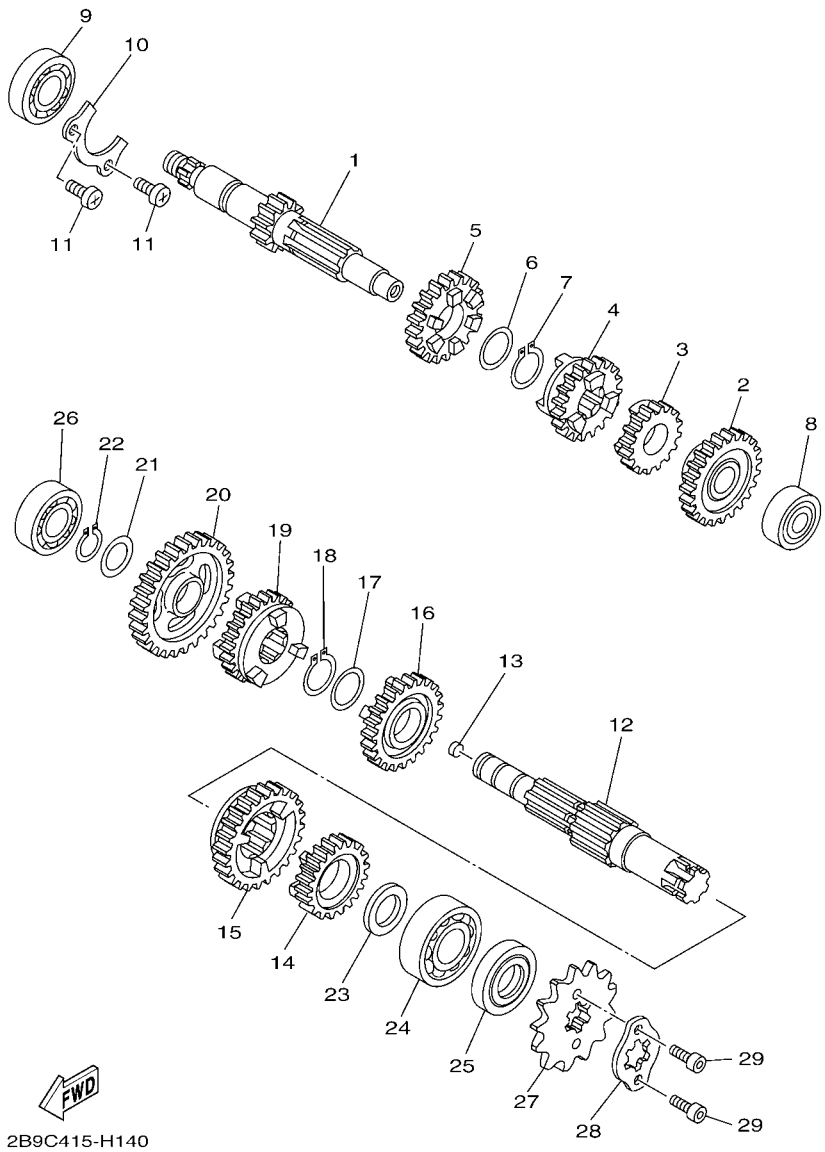

FIG. 14 TRANSMISION — TRANSMISSION

REF. Nº	CODIGO Nº PART NO.	DESCRIPCION DESCRIPTION	1NC1					OBSERV REMARK
1	5VL–E7411–00	EJE PRIMARIO (14T) AXLE, MAIN (14T)	1					
2	5VL–E7151–00	ENGRANAJE PINON DE 5TA (24T) GEAR, 5TH PINION (24T)	1					
3	5VL–E7121–00	ENGRANAJE DE PINON DE 2DA(18T) GEAR, 2ND PINION (18T)	1					
4	5VL–E7131–00	ENGRANAJE PINON DE 3RA (19T) GEAR, 3RD PINION (19T)	1					
5	5VL–E7141–00	ENGRANAJE PINON DE 4TA (22T) GEAR, 4TH PINION (22T)	1					
6	90201–20266	ARANDELA, PLACA (T=1.0) WASHER, PLATE (T=1.0)	1					
7	93410–20809	SEGURO CIRCLIP	1					
8	93306–201Y8	COJINETE BEARING	1					
9	93306–203YT	COJINETE BEARING	1					
10	5VL–E7471–00	PLACA, DE CUBIERTA PLATE, COVER	1					
11	98512–06012	TORNILLO SCREW, PAN HEAD	2					
12	5VL–E7421–00	EJE SECUNDARIO AXLE, DRIVE	1					
13	90331–07031	TAPON PLUG	1					
14	5VL–E7251–00	ENGRANAJE RUEDA DE 5TA (21T) GEAR, 5TH WHEEL (21T)	1					
15	5VL–E7221–00	ENGRANAJE RUEDA DE 2DA (32T) GEAR, 2ND WHEEL (32T)	1					
16	5VL–E7231–00	ENGRANAJE RUEDA DE 3RA (25T) GEAR, 3RD WHEEL (25T)	1					
17	90201–20266	ARANDELA, PLACA (T=1.0) WASHER, PLATE (T=1.0)	1					
18	93410–20809	SEGURO CIRCLIP	1					
19	5VL–E7241–00	ENGRANAJE DE RUEDA 4TA (23T) GEAR, 4TH WHEEL (23T)	1					
20	5VL–E7211–00	ENGRANAJE RUEDA DE 1 RA (37T) GEAR, 1ST WHEEL (37T)	1					
21	90201–15700	ARANDELA PLANA WASHER, PLATE	1					
22	99009–15400	PRESILLA REDONDA CIRCLIP	1					
23	90201–20272	ARANDELA PLANA WASHER, PLATE	1					
24	93306–204YD	COJINETE BEARING	1					
25	93102–20854	SELLO ACEITE OIL SEAL	1					
26	93306–202XP	COJINETE BEARING	1					
27	93822–14813	CORONA (14T) SPROCKET, DRIVE (14T)	1					

www.seacubemoto.com

SEACUBE ONE-STOP PARTS SOLUTION

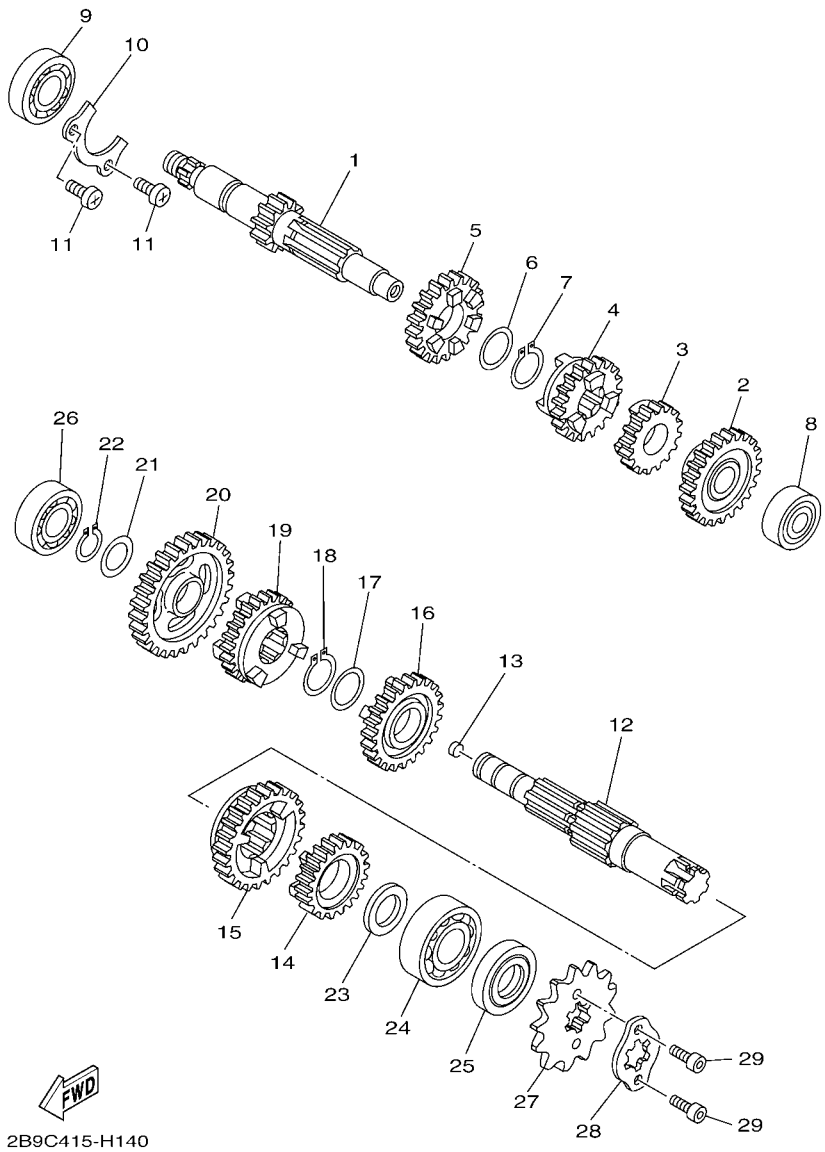

FIG. 14 TRANSMISION — TRANSMISSION

REF. Nº	CODIGO Nº PART NO.	DESCRIPCION DESCRIPTION	1NC1					OBSERV REMARK
28	3D9–E7456–01	SOPORTE DE CORONA HOLDER, SPROCKET	1					
29	91312–05010	TORNILLO BOLT	2					

www.seacubemoto.com

SEACUBE
ONE-STOP PARTS SOLUTION

SEACUBE
ONE-STOP PARTS SOLUTION

FIG. 15 LEVA DE CAMBIO & HORQUILLA SHIFT CAM & FORK

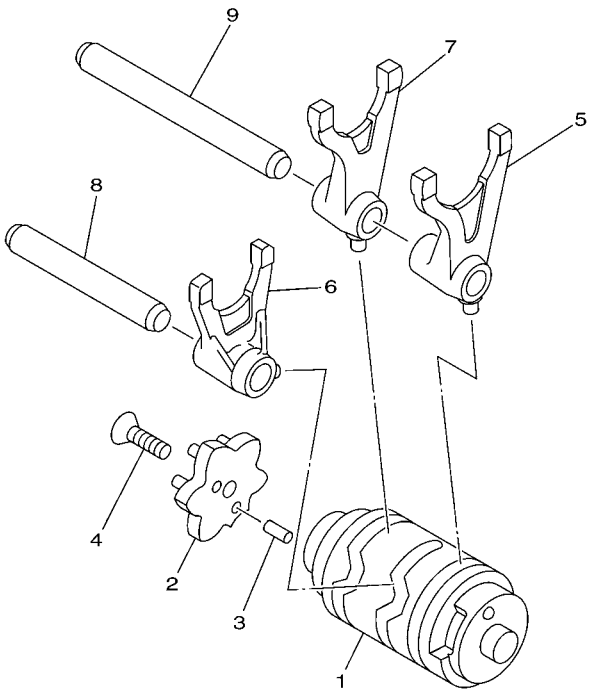

5HP1100-0140

REF. Nº	CODIGO Nº PART NO.	DESCRIPCION DESCRIPTION	1NC1					OBSERV REMARK
1	5VL–Y1854–01	LEVADEL CAMBIO COMPLETA SHIFT CAM ASSY	1					
2	2D0–E8185–00	SEGMENTO DE RETENCION SEGMENT	1					
3	93604–10837	PASADOR DE CLAVIJA PIN, DOWEL	2					
4	90151–06818	TORNILLO EMBUTIDO SCREW, COUNTERSUNK	1					
5	5VL–E8511–00	HORQUILLA DEL CAMBIO 1 FORK, SHIFT 1	1					
6	5VL–E8512–00	HORQUILLA DEL CAMBIO 2 FORK, SHIFT 2	1					
7	5VL–E8513–00	HORQUILLA DEL CAMBIO 3 FORK, SHIFT 3	1					
8	5VL–E8531–00	BARRA GUIA HORQ. CAMBIO 1 BAR, SHIFT FORK GUIDE 1	1					
9	5VL–E8535–00	BARRA GUIA HORQ .CAMBIO 2 BAR, SHIFT FORK GUIDE 2	1					

www.seacubemoto.com

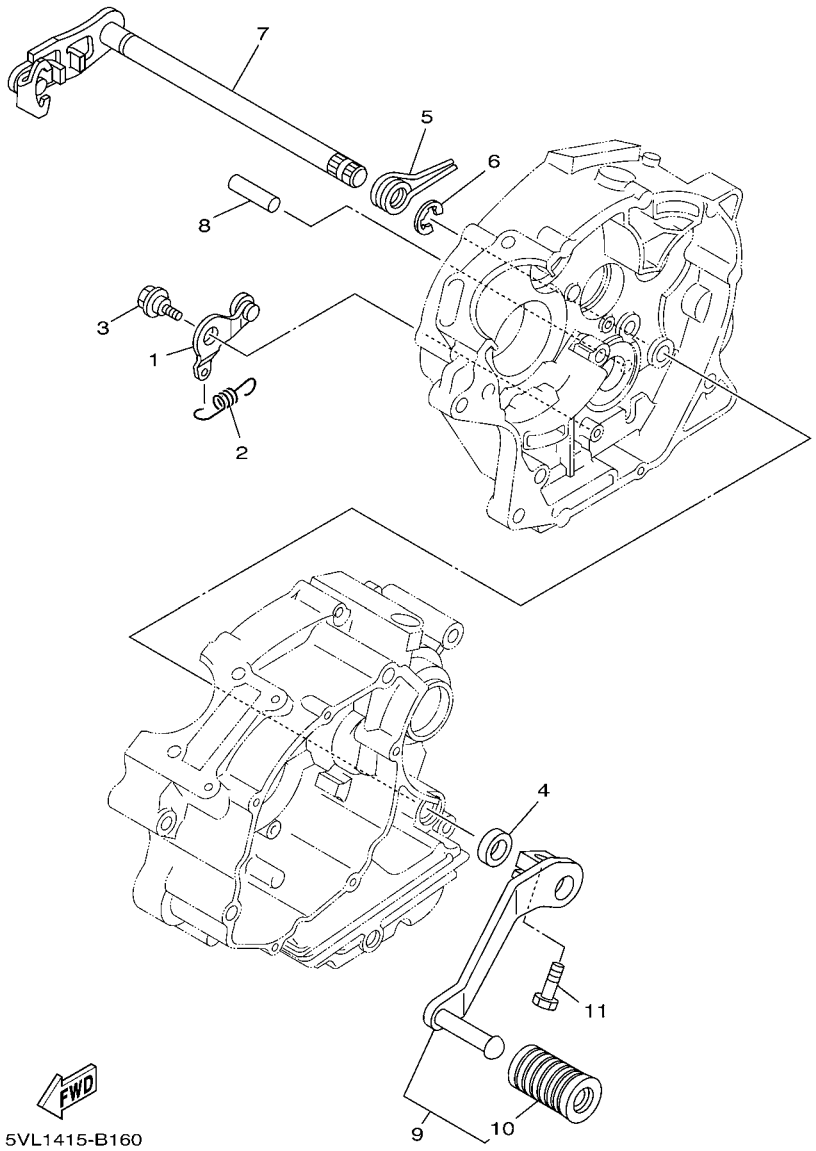

FIG. 16 EJE DE CAMBIO & PEDAL SHIFT SHAFT

REF. Nº	CODIGO Nº PART NO.	DESCRIPCION DESCRIPTION	1NC1					OBSERV REMARK
1	5VL–E8140–00	PALANCA DE TOPE COMPLETA STOPPER LEVER ASSY	1					
2	5VL–E8337–00	RESORTE SPRING	1					
3	4FP–E8177–00	TORNILLO DE TOPE BOLT, STOPPER	1					
4	93101–12812	SELLO ACEITE OIL SEAL	1					
5	90508–32801	RESORTE DE TORSION SPRING, TORSION	1					
6	99002–10600	PRESILLA REDONDA CLIP	1					
7	5VL–E8101–02	EJE SELECTOR COMPLETO SHIFT SHAFT ASSY	1					
8	93608–30839	PASADOR DE CLAVIJA PIN, DOWEL	1					
9	5VL–E8110–01	PEDAL DE CAMBIO COMPLETO SHIFT PEDAL ASSY	1					
10	1KL–E8113–00	.FUNDA DEL PEDAL DEL CAMBIO .COVER, SHIFT PEDAL	1					
11	97022–06020	PERNO BOLT	1					

www.seacubemoto.com

SEACUBE ONE-STOP PARTS SOLUTION

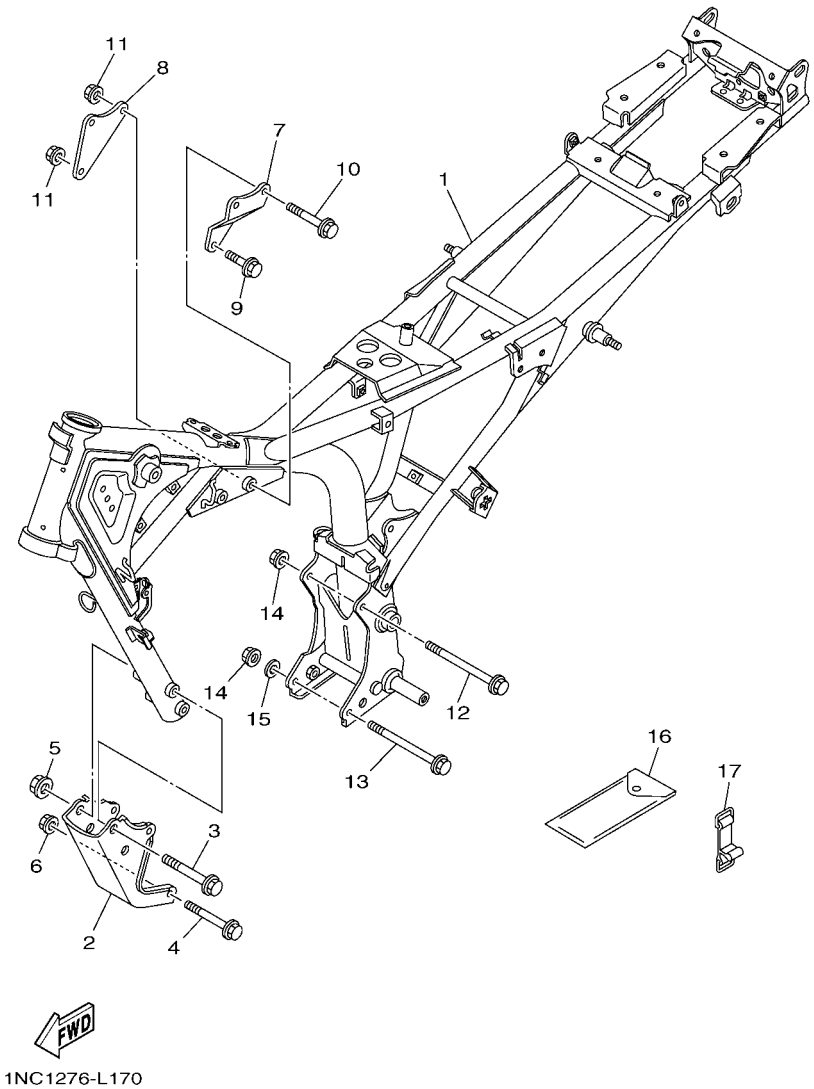

1NC1276-L170

FIG. 17 CUADRO — FRAME

REF. Nº	CODIGO Nº PART NO.	DESCRIPCION DESCRIPTION	1NC1					OBSERV REMARK
1	1NC–F1110–00	ARMAZON COMPLETO FRAME COMP.	1					
2	42D–F1316–00	SOPORTE DE MOTOR 3 STAY, ENGINE 3	1					
3	95812–10080	TORNILLO DE REBORDE BOLT, FLANGE	2					
4	90105–08874	TORNILLO BOLT, FLANGE	2					
5	90179–10807	TUERCA NUT	2					
6	90179–08830	TUERCA NUT	2					
7	42D–F1317–00	SOPORTE DE MOTOR 3 STAY, ENGINE 3	1					
8	42D–F1318–00	SOPORTE DE MOTOR 5 STAY, ENGINE 5	1					
9	90105–088E4	TORNILLO BOLT, FLANGE	1					
10	90105–088E5	TORNILLO BOLT, FLANGE	2					
11	90179–08830	TUERCA NUT	3					
12	90105–08873	TORNILLO BOLT, FLANGE	1					
13	90105–088E6	TORNILLO BOLT, FLANGE	1					
14	90179–08830	TUERCA NUT	2					
15	90201–08840	ARANDELA PLANA WASHER, PLATE	1					
16	5VL–F8100–01	JUEGO DE HERRAMIENTAS TOOL KIT	1					
17	5VL–F811G–01	CINTA BAND	1					

www.seaubemoto.com

SEA BUBE
ONE-STOP PARTS SOLUTION

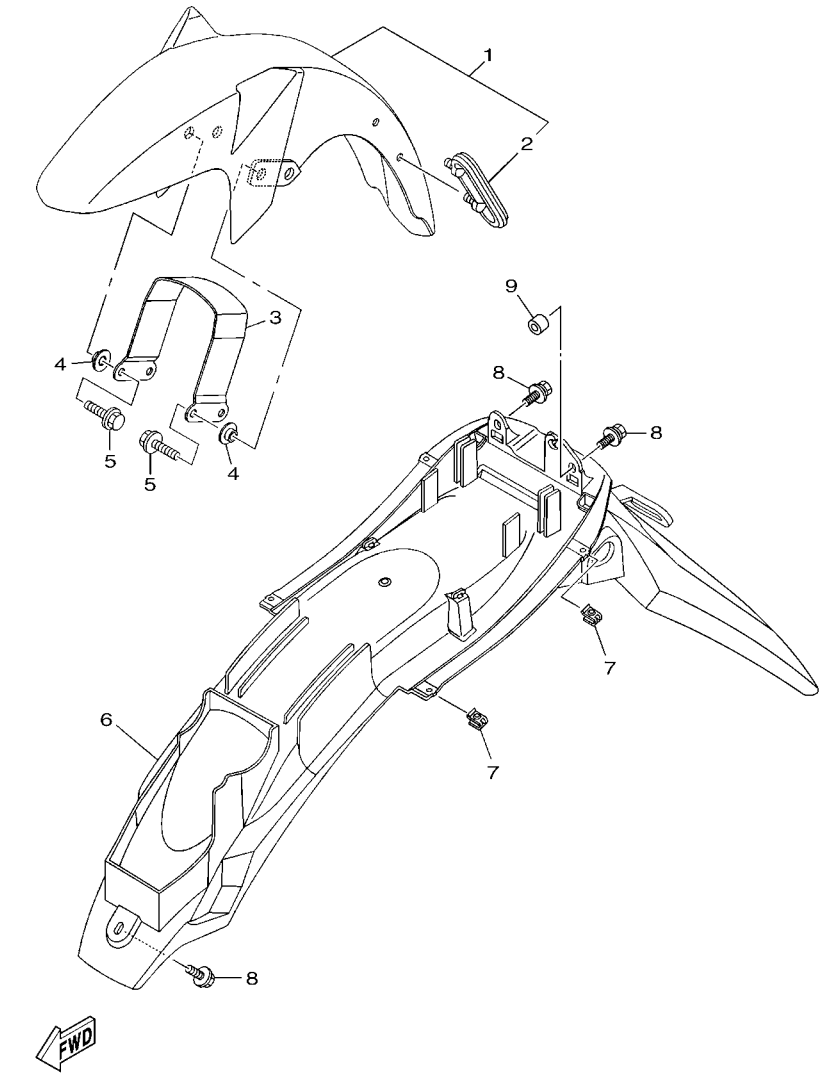

1PX1210-L180

FIG. 18 GUARDABARRO FENDER

REF. Nº	CODIGO Nº PART NO.	DESCRIPCION DESCRIPTION	1NC1					OBSERV REMARK
1	18C–Y2151–00–P0	GUARDABARRO DELANTERO COMPL. FRONT FENDER ASSY	1					UR PARA VR UR FOR VR
	18C–Y2151–00–P1	GUARDABARRO DELANTERO COMPL. FRONT FENDER ASSY	1					UR PARA BM UR FOR BM
	18C–Y2151–00–P2	GUARDABARRO DELANTERO COMPL. FRONT FENDER ASSY	1					UR PARA DBNM8 UR FOR DBNM8
2	5VL–F1518–01	.SOPORTE DE CABLE .HOLDER, CABLE	1					
3	18C–F1513–01	SOPORTE DE GUARDABARRO STAY, FENDER 1	1					
4	90387–07818	ESPACIADOR COLLAR	4					
5	95822–06020	TORNILLO DE REBORDE BOLT, FLANGE	4					
6	18C–F1611–00	GUARDABARRO TRASERO FENDER, REAR	1					
7	90183–05807	TUERCA DE RESORTE NUT, SPRING	4					
8	90119–06869	TORNILLO CON ARANDELA BOLT, WITH WASHER	3					
9	90445–08838	TUBO HOSE	1					

www.seacubemoto.com

SEA CUBE
ONE-STOP PARTS SOLUTION

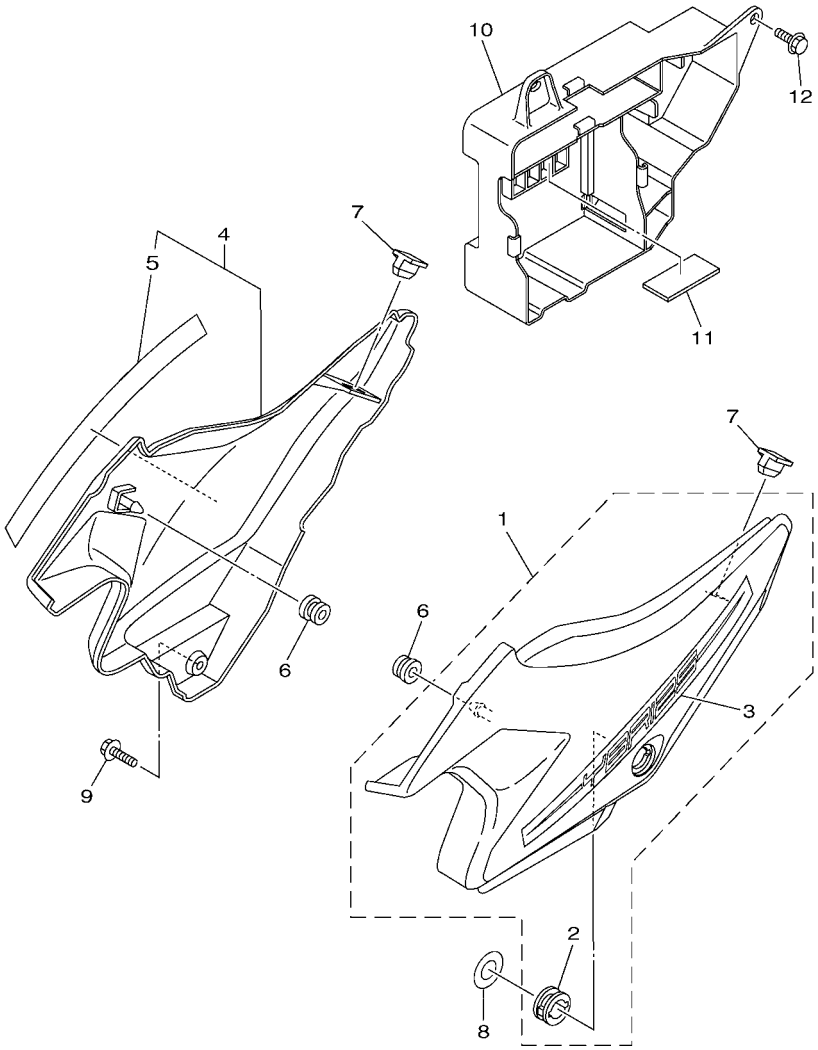

1NC1276-L190

FIG. 19 CUBIERTA LATERAL SIDE COVER

REF. Nº	CODIGO Nº PART NO.	DESCRIPCION DESCRIPTION	1NC1					OBSERV REMARK
1	18C–Y2171–00–P0	CUBIERTA, LATERAL 1 COVER, SIDE 1	1					SMX PARA V SMX FOR V
	18C–Y2171–01–P0	CUBIERTA, LATERAL 1 COVER, SIDE 1	1					SMX PARA D SMX FOR D
2	90480–24186	.TAPON .GROMMET	1					
3	18C–F173E–00	.GRAFICO, 1 .GRAPHIC 1	1					PARA VRC7,BMC FOR VRC7,BMC
	18C–F173E–10	.GRAFICO, 1 .GRAPHIC 1	1					PARA DBNM8 FOR DBNM8
4	18C–Y2172–06–P0	CUBIERTA, LATERAL 2 COVER, SIDE 2	1					SMX PARA VRC7,BMC SMX FOR VRC7,BMC
	18C–Y2172–07–P0	CUBIERTA, LATERAL 2 COVER, SIDE 2	1					SMX PARA DBNM8 SMX FOR DBNM8
5	18C–F173E–00	.GRAFICO, 1 .GRAPHIC 1	1					PARA VRC7,BMC FOR VRC7,BMC
	18C–F173E–10	.GRAFICO, 1 .GRAPHIC 1	1					PARA DBNM8 FOR DBNM8
6	90480–13837	TAPON GROMMET	2					
7	5VL–F1778–00	AMORTIGUADOR DE MONTAJE DAMPER, LOCATING 1	2					
8	90201–228F6	ARANDELA PLANA WASHER, PLATE	1					
9	90119–06869	TORNILLO CON ARANDELA BOLT, WITH WASHER	1					
10	18C–F177G–00	CAJA DE BATERIA BOX, BATTERY	1					
11	5VL–F1746–00	AMORTIGUADOR DAMPER	1					
12	90119–06811	TORNILLO CON ARANDELA BOLT, WITH WASHER	3					

www.spareparts-to.com

SEA LUBE
ONE-STOP PARTS SOLUTION

FIG. 20 BRAZO TRASERO & SUSPENSION REAR ARM & SUSPENSION

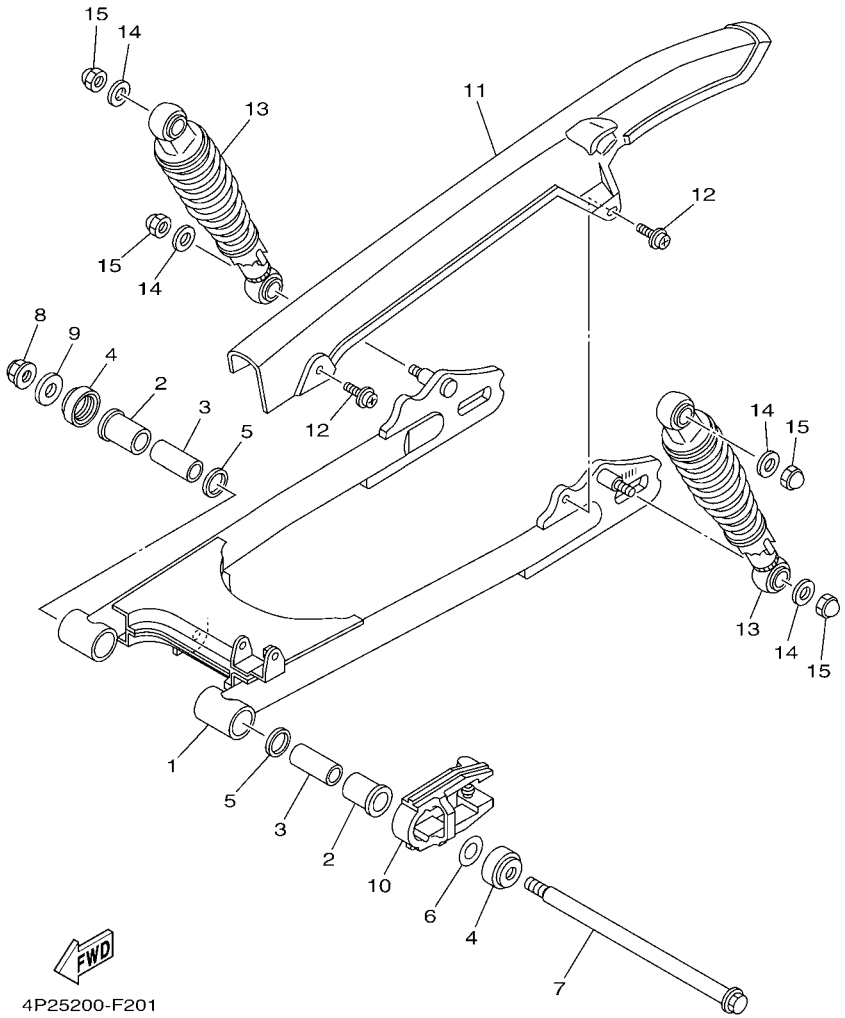

REF. Nº	CODIGO Nº PART NO.	DESCRIPCION DESCRIPTION	1NC1					OBSERV REMARK
1	5VL–F2110–00	BRAZO TRASERO COMPLETO REAR ARM COMP.	1					
2	90386–18099	BUJE BUSH	2					
3	5VL–F2123–00	BUJE 1 BUSH 1	2					
4	5VL–F2128–01	TAPA DE EMPIJE 1 COVER, THRUST 1	2					
5	93109–18802	SELLO ACEITE OIL SEAL	2					
6	5VL–F2127–00	CUNA SHIM	1					
7	5VL–F2141–01	EJE DEL BARCULANTE SHAFT, PIVOT	1					
8	95602–12200	TUERCA DE AUTO-CIERRE NUT, SELF-LOCKING	1					
9	90201–12819	ARANDELA PLANA WASHER, PLATE	1					
10	5VL–F2151–10	SELLO DE GUARDA SEAL, GUARD	1					
11	5VL–F2311–00	CABRECADENA CASE, CHAIN	1					
12	90159–06830	TORNILLO CON VALONA SCREW, WITH WASHER	2					
13	5VL–F2210–01	AMORTIGUADOR TRASERO COMPLETO SHOCK ABSORBER ASSY, REAR	2					
14	90201–108C7	ARANDELA PLANA WASHER, PLATE	4					
15	90176–10810	TUERCA CORONA NUT, CROWN	4					

www.spbemoto.com

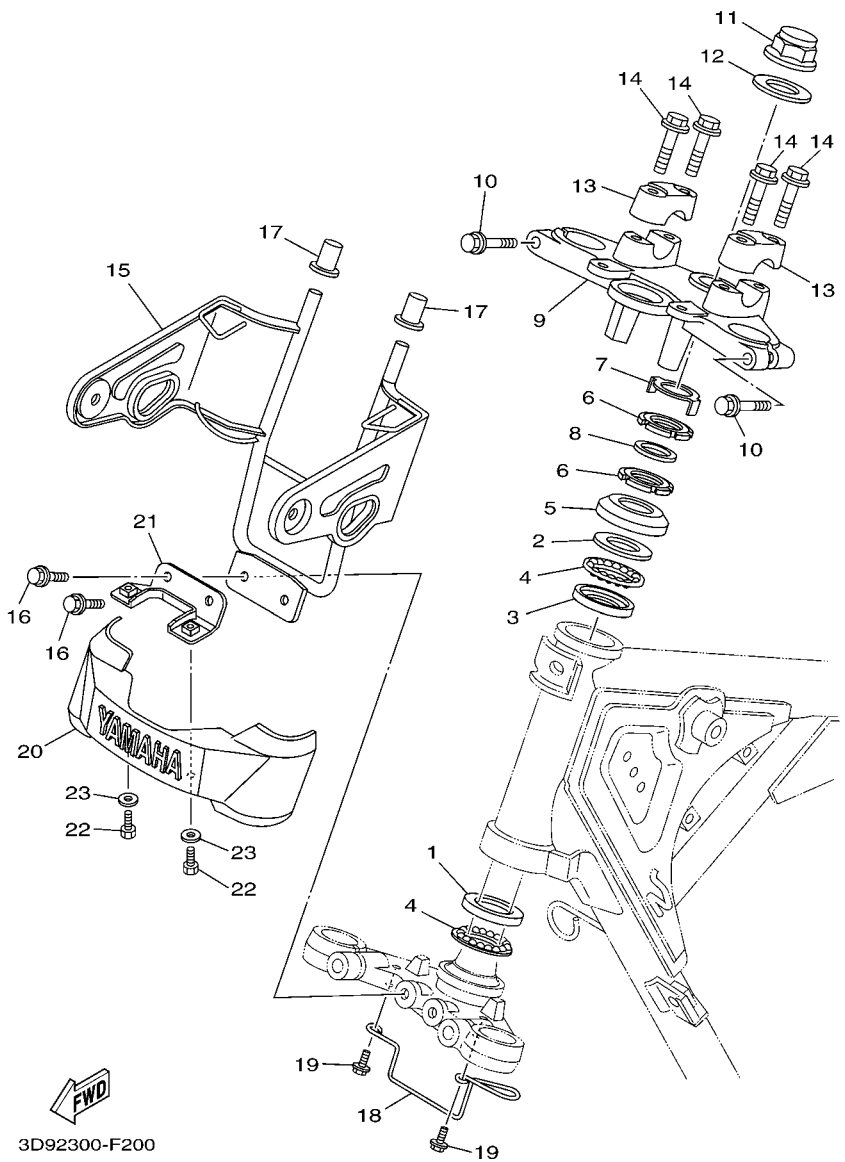

FIG. 21 DIRECCION STEERING

REF. Nº	CODIGO Nº PART NO.	DESCRIPCION DESCRIPTION	1NC1					OBSERV REMARK
1	1KL–F3412–00	PISTA DE BOLAS 2 RACE, BALL 2	1					
2	4FP–F3411–00	PISTA DE BOLAS 1 RACE, BALL 1	1					
3	4FP–F3412–00	PISTA DE BOLAS 2 RACE, BALL 2	1					
4	5VL–F341E–00	RETEN DE COJINETE RETAINER, BALL BEARING	2					
5	4GU–F3416–00	CUBIERTA DE BASE DE BOLA 2 COVER, BALL RACE 2	1					
6	90179–25810	TUERCA NUT	2					
7	42D–F3418–00	ARANDELA ESPECIAL WASHER, SPECIAL	1					
8	90202–26142	ARANDELA DE PLANA WASHER, PLATE	1					
9	5VL–F3435–00–33	PLATINA SUPERIOR CROWN, HANDLE	1					YB YB
10	95022–08040	PERNO, DE BRIDA BOLT, FLANGE	2					
11	90176–22801	TUERCA CORONA NUT, CROWN	1					
12	90201–22804	ARANDELA PLANA WASHER, PLATE	1					
13	5VL–F3441–00	SOPORTE DE MANUBRIO HOLDER, HANDLE UPPER	2					
14	95022–08035	PERNO, DE BRIDA BOLT, FLANGE	4					
15	3D9–F3174–10	SOPORTE DEL FARO DELANTERO STAY, HEADLIGHT	1					
16	95822–06016	TORNILLO DE REBORDE BOLT, FLANGE	2					
17	4FP–F317J–00	AMORTIGUADOR 1 DAMPER 1	2					
18	18C–F3389–00	GUIA DE CABLE GUIDE, CABLE	1					
19	95822–06012	TORNILLO DE REBORDE BOLT, FLANGE	2					
20	4FP–F3395–10	EMBLEMA EMBLEM	1					
21	42D–F334G–00	SOPORTE 1 BRACKET 1	1					
22	97002–05012	PERNO BOLT	2					
23	90201–05802	ARANDELA PLANA WASHER, PLATE	2					

www.spbcmotor.com

SE PLUS LUBE
ONE-STOP PARTS SOLUTION

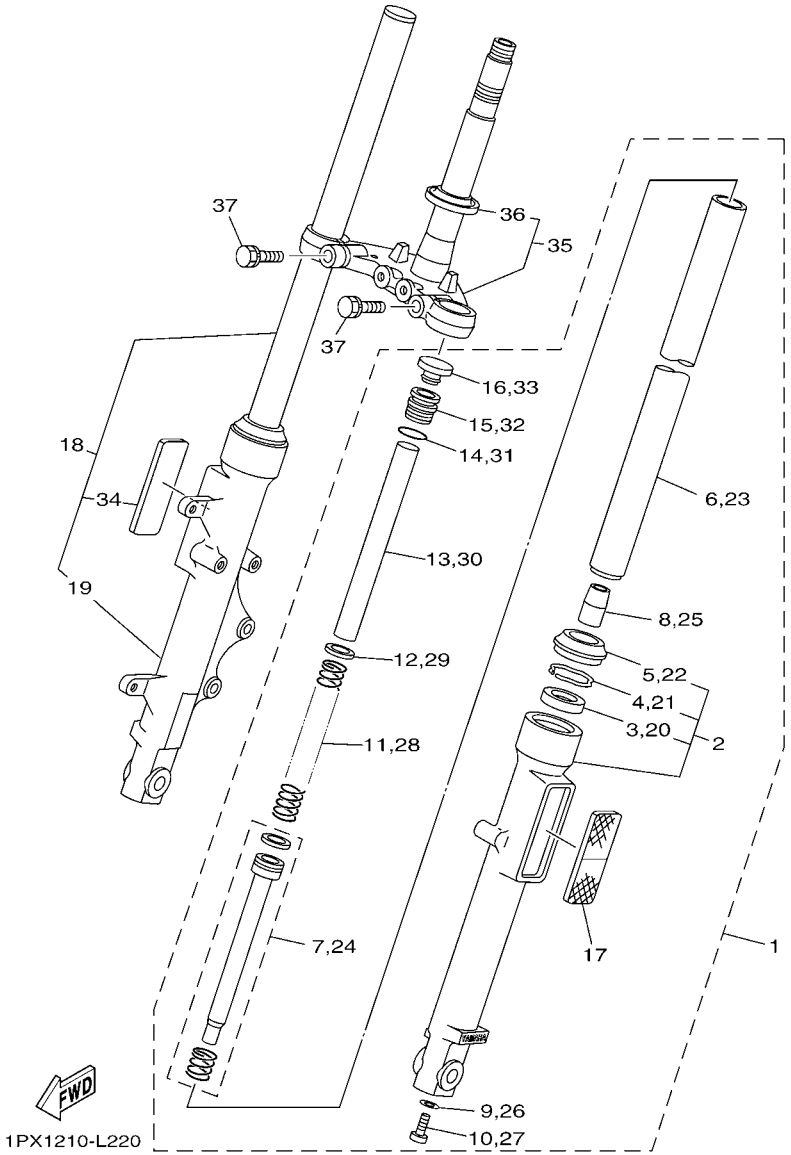

FIG. 22 HORQUILLA DELANTERA FRONT FORK

REF. Nº	CODIGO Nº PART NO.	DESCRIPCION DESCRIPTION	1NC1					OBSERV REMARK
1	5VL–F3102–B0	HORQUILLA DELANTERA COMPL.(MI) FRONT FORK ASSY (L.H)	1					
2	5VL–F3106–30	.TUBO EXTERIOR COMPLETO .OUTER TUBE COMP.	1					
3	4GU–F3145–00	..RETEN DE ACEITE ..OIL SEAL	1					
4	5AP–F3153–00	..ANILLO DE ENGANCHE ..RING, SNAP	1					
5	4GU–F3144–00	..GUARDAPOLVO ..SEAL, DUST	1					
6	5HH–F3110–22	.TUBO INTERIOR COMPLETO 1 .INNER TUBE COMP.1	1					
7	5VL–F3170–01	.CILINDRO COMPL DE HORQ DELANT .CYLINDER COMP., FRONT FORK	1					
8	4GU–F3173–01	.VASTAGO AHUSADO .SPINDLE, TAPER	1					
9	4TU–F3479–00	.EMPAQUE .GASKET	1					
10	5LK–F3356–01	.PERNO 2 .BOLT 2	1					
11	5VL–F3141–40	.RESORTE HORQUILLA DELANT. .SPRING, FRONT FORK	1					
12	5AP–F3427–00	.ARANDELA .WASHER	1					
13	5HH–F3118–10	.SEPARADOR .SPACER	1					
14	5AP–F3147–00	.ARO .O-RING	1					
15	5VL–F3111–20	.PERNO DE TAPA .BOLT, CAP	1					
16	5VL–F3154–00	.TAPON TUBO INTERIOR .CAP	1					
17	5VL–H5110–01	.REFLECTOR COMPLETO .REFLECTOR ASSY	1					
18	5VL–F3103–B0	HORQUILLA DELANTERA COMPL.(MD) FRONT FORK ASSY (R.H)	1					
19	5VL–F3107–40	.TUBO EXTERIOR COMPLETO (MD) .OUTER TUBE COMP. (R.H)	1					
20	4GU–F3145–00	..RETEN DE ACEITE ..OIL SEAL	1					
21	5AP–F3153–00	..ANILLO DE ENGANCHE ..RING, SNAP	1					
22	4GU–F3144–00	..GUARDAPOLVO ..SEAL, DUST	1					
23	5HH–F3110–22	.TUBO INTERIOR COMPLETO 1 .INNER TUBE COMP.1	1					
24	5VL–F3170–01	.CILINDRO COMPL DE HORQ DELANT .CYLINDER COMP., FRONT FORK	1					
25	4GU–F3173–01	.VASTAGO AHUSADO .SPINDLE, TAPER	1					
26	4TU–F3479–00	.EMPAQUE .GASKET	1					
27	5LK–F3356–01	.PERNO 2 .BOLT 2	1					

www.seacube.com

SEA CUBE
ONE-STOP PARTS SOLUTION

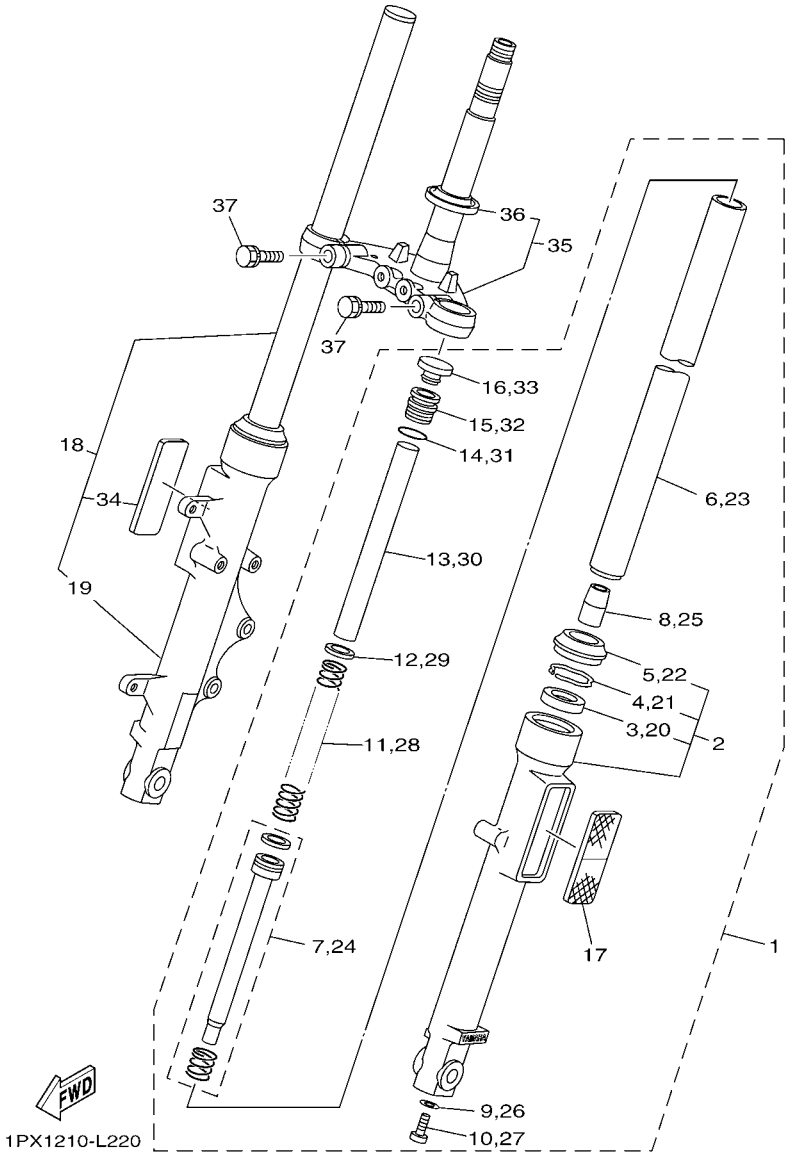

FIG. 22 HORQUILLA DELANTERA FRONT FORK

REF. Nº	CODIGO Nº PART NO.	DESCRIPCION DESCRIPTION	1NC1					OBSERV REMARK
28	5VL–F3141–40	.RESORTE HORQUILLA DELANT. .SPRING, FRONT FORK	1					
29	5AP–F3427–00	.ARANDELA .WASHER	1					
30	5HH–F3118–10	.SEPARADOR .SPACER	1					
31	5AP–F3147–00	.ARO .O-RING	1					
32	5VL–F3111–20	.PERNO DE TAPA .BOLT, CAP	1					
33	5VL–F3154–00	.TAPON TUBO INTERIOR .CAP	1					
34	5VL–H5110–01	.REFLECTOR COMPLETO .REFLECTOR ASSY	1					
35	5VL–F331X–01	MENSULA INFERIOR BRACKET, UNDER	1					
36	4FP–F3411–10	.PISTA DE BOLAS 1 .RACE, BALL	1					
37	5VL–F3346–01	PERNO 1 BOLT 1	2					

www.seacubemoto.com

SEACUBE ONE-STOP PARTS SOLUTION

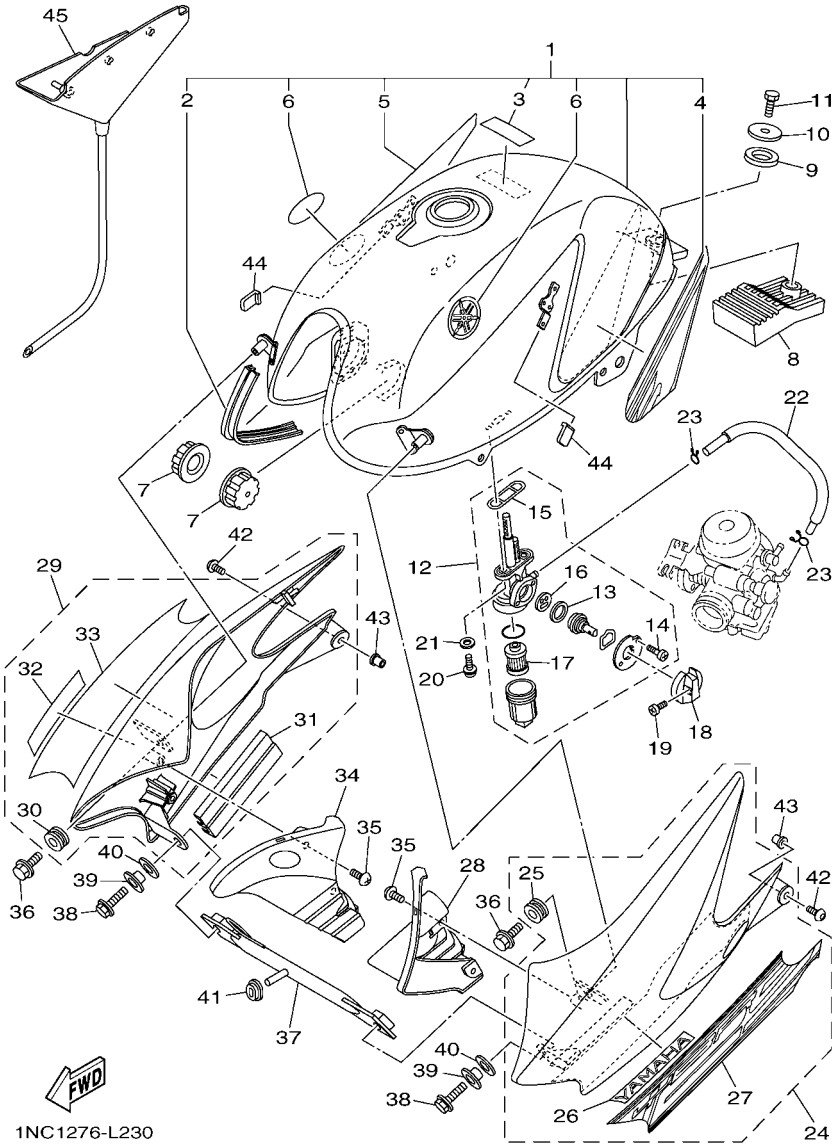

FIG. 23 DEPOSITO DE COMBUSTIBLE FUEL TANK

REF. Nº	CODIGO Nº PART NO.	DESCRIPCION DESCRIPTION	1NC1					OBSERV REMARK
1	1PX–W2411–00–P0	DEPOSITO DE COMBUSTIBLE COMP. FUEL TANK ASSY	1					UR PARA VR UR FOR VR
	1PX–W2411–00–P1	DEPOSITO DE COMBUSTIBLE COMP. FUEL TANK ASSY	1					UR PARA BM UR FOR BM
	1PX–W2411–00–P2	DEPOSITO DE COMBUSTIBLE COMP. FUEL TANK ASSY	1					UR PARA DBNM8 UR FOR DBNM8
2	18C–F4188–00	.MOLDURA DEPOSITO COMBUST. .MOLD, FUEL TANK	1					
3	5PA–21568–01	.ETIQUETA DE PRECAUCION .LABEL, WARNING	1					
4	18C–F4244–00	.CALCOMANIA DEPOSITO COMBUST.1 .GRAPHIC, FUEL TANK 1	1					UR PARA VRC7 UR FOR VRC7
	18C–F4244–10	.CALCOMANIA DEPOSITO COMBUST.1 .GRAPHIC, FUEL TANK 1	1					UR PARA BMC UR FOR BMC
	18C–F4244–20	.CALCOMANIA DEPOSITO COMBUST.1 .GRAPHIC, FUEL TANK 1	1					UR PARA DBNM8 UR FOR DBNM8
5	18C–F4245–00	.CALCOMANIA DEPOSITO COMBUST.2 .GRAPHIC, FUEL TANK 2	1					UR PARA VRC7 UR FOR VRC7
	18C–F4245–10	.CALCOMANIA DEPOSITO COMBUST.2 .GRAPHIC, FUEL TANK 2	1					UR PARA BMC UR FOR BMC
	18C–F4245–20	.CALCOMANIA DEPOSITO COMBUST.2 .GRAPHIC, FUEL TANK 2	1					UR PARA DBNM8 UR FOR DBNM8
6	2B9–F411B–00	.EMBLEMA .EMBLEM	2					
7	4FP–F4181–00	AMORTIGUADOR DE MONTAJE 1 DAMPER, LOCATING 1	2					
8	5VL–F4183–00	AMORTIGUADOR DE MONTAJE 3 DAMPER, LOCATING 3	1					
9	5VL–F4182–00	AMORTIGUADOR DE MONTAJE 2 DAMPER, LOCATING 2	1					
10	90201–088P2	ARANDELA PLANA WASHER, PLATE	1					
11	97002–08016	PERNO BOLT	1					
12	5VL–F4500–00	GRIFO DE COMBUSTIBLE 1 FUEL COCK ASSY 1	1					
13	5VL–F4534–00	.SELLO DE GRIFO .SEAL, COCK	1					
14	97880–03008	.TORNILLO DE CABEZA CON PLANA .SCREW, PAN HEAD	2					
15	5VL–F4512–00	.EMPAQUE .GASKET	1					
16	5VL–F4523–00	.VALVULA .VALVE	1					
17	5VL–F4515–00	.RED DE FILTRO 2 .NET, FILTER 2	1					
18	5VL–F4524–01	LLAVE DEL GRIFO LEVER, COCK	1					
19	90157–03800	TORNILLO CABEZA CONICA PLANA SCREW, PAN HEAD	1					
20	90159–06820	TORNILLO CON VALONA SCREW, WITH WASHER	2					
21	90430–05800	JUNTA GASKET	2					

www.seandbemotor.com

SEA DUCTIBE ONE-STOP PARTS SOLUTION

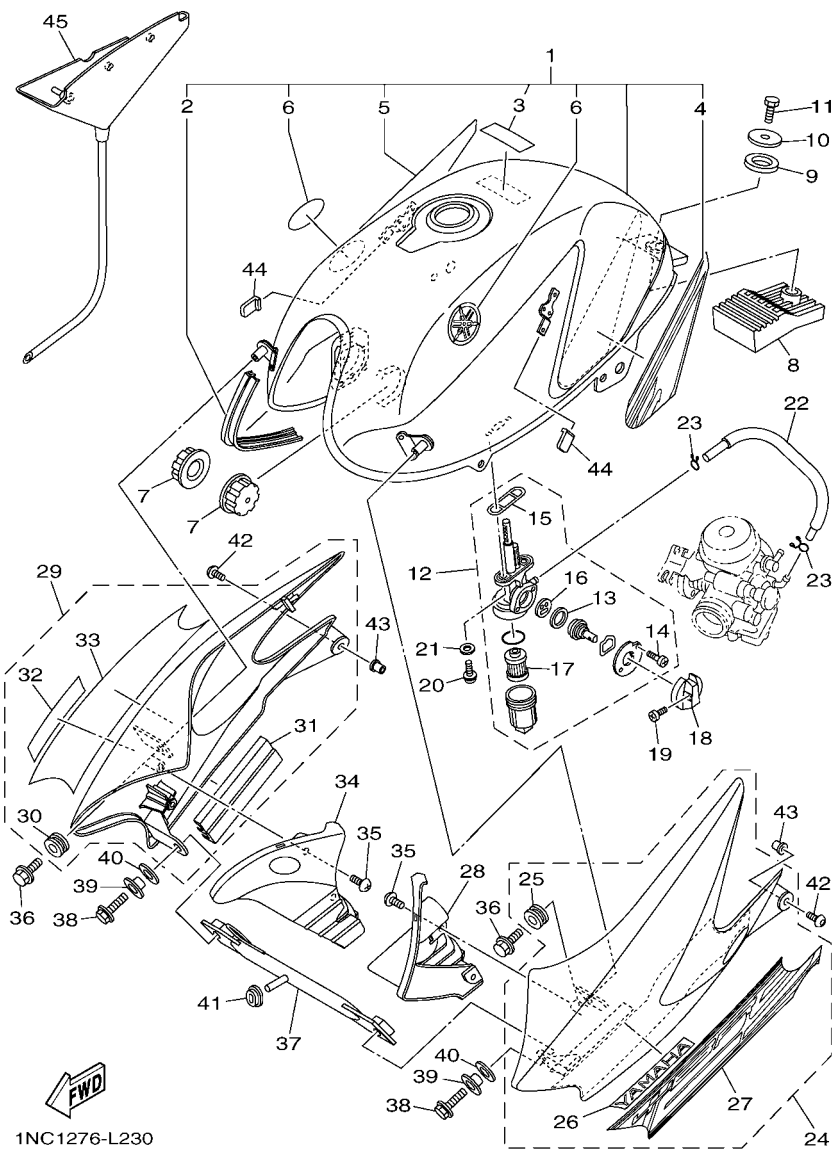

FIG. 23 DEPOSITO DE COMBUSTIBLE FUEL TANK

REF. Nº	CODIGO Nº PART NO.	DESCRIPCION DESCRIPTION	1NC1					OBSERV REMARK
22	4P2–F4311–00	TUBO DE COMBUSTIBLE 1 PIPE, FUEL 1	1					
23	90467–09854	PRESILLA CLIP	2					
24	18C–W137W–00–P0	CUBIERTA DE GUIA DE AIRE 1 SCOOP, AIR 1	1					UR PARA VRC7 UR FOR VRC7
	18C–W137W–00–P1	CUBIERTA DE GUIA DE AIRE 1 SCOOP, AIR 1	1					UR PARA BMC UR FOR BMC
	18C–W137W–00–P2	CUBIERTA DE GUIA DE AIRE 1 SCOOP, AIR 1	1					UR PARA DBNM8 UR FOR DBNM8
25	90480–15878	.TAPON .GROMMET	1					
26	99236–00100	.EMBLEMA, YAMAHA .EMBLEM, YAMAHA	1					
27	18C–F4255–00	.CALCOMANIA DEP. COMBUSTIBLE 8 .GRAPHIC, FUEL TANK 8	1					UR PARA VRC7 UR FOR VRC7
	18C–F4255–10	.CALCOMANIA DEP. COMBUSTIBLE 8 .GRAPHIC, FUEL TANK 8	1					UR PARA BMC UR FOR BMC
	18C–F4255–20	.CALCOMANIA DEP. COMBUSTIBLE 8 .GRAPHIC, FUEL TANK 8	1					UR PARA DBNM8 UR FOR DBNM8
28	18C–F137U–00	GUIA DE AIRE 1 GUIDE, AIR 1	1					
29	18C–W137X–01–P0	CUBIERTA DE GUIA DE AIRE 2 SCOOP, AIR 2	1					UR PARA VRC7 UR FOR VRC7
	18C–W137X–01–P1	CUBIERTA DE GUIA DE AIRE 2 SCOOP, AIR 2	1					PARA BMC FOR BMC
	18C–W137X–01–P2	CUBIERTA DE GUIA DE AIRE 2 SCOOP, AIR 2	1					UR PARA DBNM8 UR FOR DBNM8
30	90480–15878	.TAPON .GROMMET	1					
31	99236–00100	.EMBLEMA, YAMAHA .EMBLEM, YAMAHA	1					
32	18C–F4188–10	.MOLDURA DEPOSITO COMBUST. .MOLD, FUEL TANK	1					
33	18C–F4256–00	.CALCOMANIA DEP. COMBUSTIBLE 9 .GRAPHIC, FUEL TANK 9	1					UR PARA VRC7 UR FOR VRC7
	18C–F4256–10	.CALCOMANIA DEP. COMBUSTIBLE 9 .GRAPHIC, FUEL TANK 9	1					UR PARA BMC UR FOR BMC
	18C–F4256–20	.CALCOMANIA DEP. COMBUSTIBLE 9 .GRAPHIC, FUEL TANK 9	1					UR PARA DBNM8 UR FOR DBNM8
34	18C–F137V–00	GUIA DE AIRE 2 GUIDE, AIR 2	1					
35	97702–50016	TORNILLO ROSCA HEMBRA SCREW, TAPPING	4					
36	95802–06012	TORNILLO DE REBORDE BOLT, FLANGE	2					
37	18C–F4216–00	SOPORTE STAY	1					
38	95802–06020	TORNILLO DE REBORDE BOLT, FLANGE	2					
39	90387–06879	ESPACIADOR COLLAR	2					
40	90202–09800	ARANDELA DE PLANA WASHER, PLATE	2					

www.seacubeparts.com
SEACUBE
ONE-STOP PARTS SOLUTION

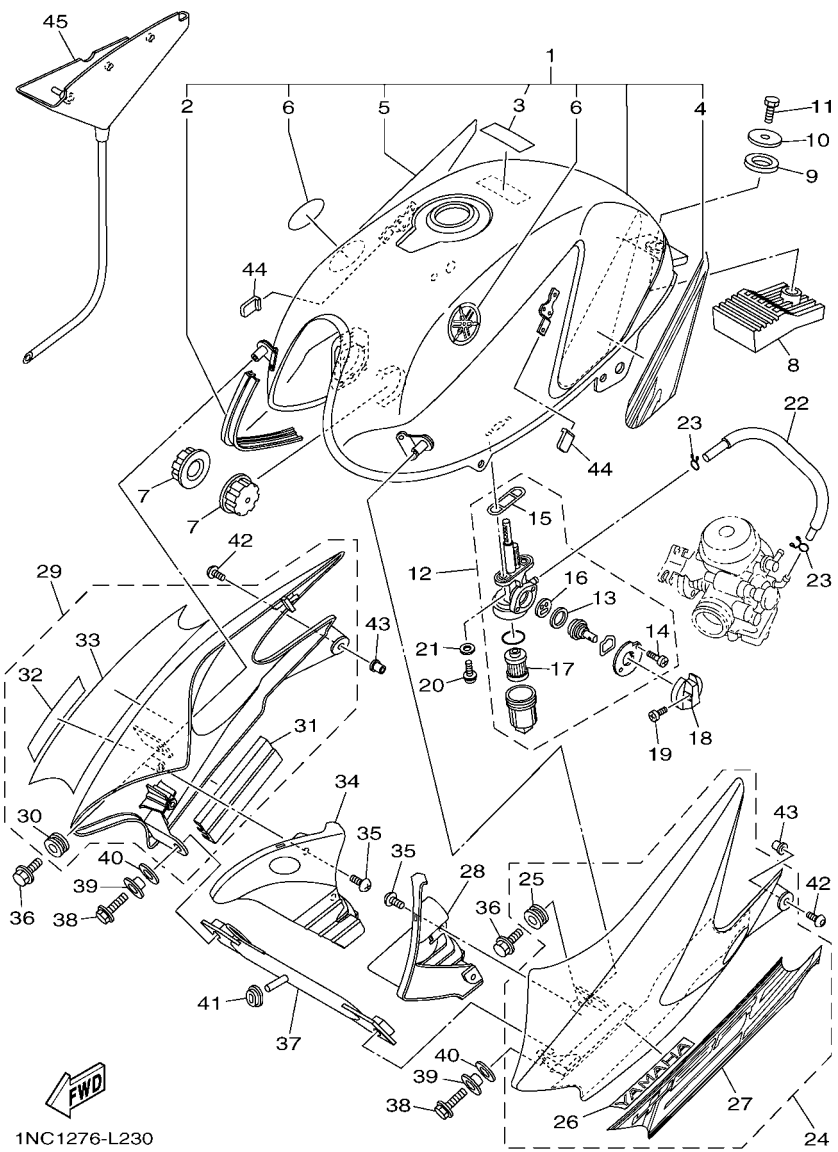

FIG. 23 DEPOSITO DE COMBUSTIBLE FUEL TANK

REF. Nº	CODIGO Nº PART NO.	DESCRIPCION DESCRIPTION	1NC1					OBSERV REMARK
41	90480–01868	TAPON GROMMET	1					
42	90111–05803	TORNILLO BOLT,HEX. SOCKET BUTTON	2					
43	90179–05523	TUERCA NUT	2					
44	12B–F411J–00	AMORTIGUADOR, DE CUBIERTA LAT DAMPER, SIDE COVER	2					
45	18C–F4217–00	CUBIERTA COVER	1					

www.seacubemoto.com

SEACUBE ONE-STOP PARTS SOLUTION

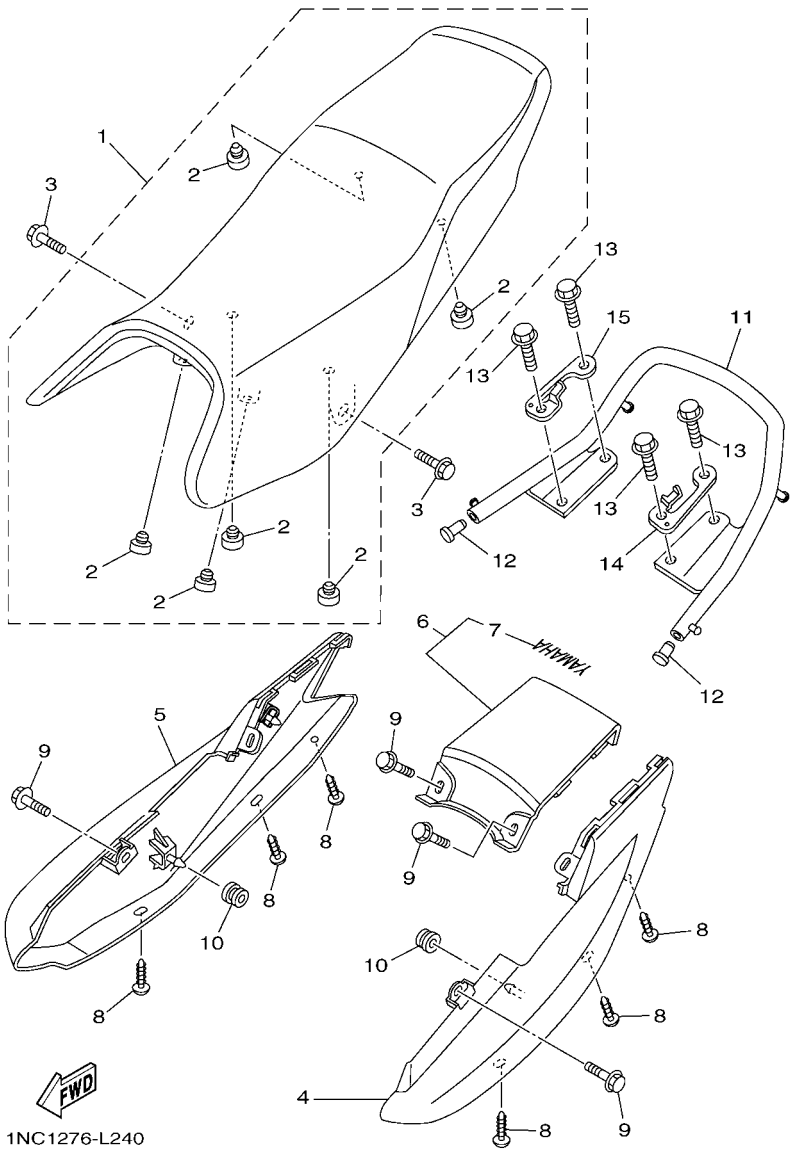

FIG. 24 ASIENTO — SEAT

REF. Nº	CODIGO Nº PART NO.	DESCRIPCION DESCRIPTION	1NC1					OBSERV REMARK
1	18C–F4730–01	SILLIN DOBLE COMPLETO DOUBLE SEAT ASSY	1					
2	4TU–F4741–00	COJIN DE ASIENTO PAD, SEAT	6					
3	90119–06869	TORNILLO CON ARANDELA BOLT, WITH WASHER	2					
4	18C–F471K–00–P0	CUBIERTA, DE COLA 1 COVER, TAIL 1	1					UR PARA VRC7 UR FOR VRC7
	18C–F471K–00–P1	CUBIERTA, DE COLA 1 COVER, TAIL 1	1					UR PARA BMC UR FOR BMC
	18C–F471K–00–P2	CUBIERTA, DE COLA 1 COVER, TAIL 1	1					UR PARA DBNM8 UR FOR DBNM8
5	18C–F472K–00–P0	CUBIERTA, DE COLA 2 COVER, TAIL 2	1					UR PARA VRC7 UR FOR VRC7
	18C–F472K–00–P1	CUBIERTA, DE COLA 2 COVER, TAIL 2	1					UR PARA BMC UR FOR BMC
	18C–F472K–00–P2	CUBIERTA, DE COLA 2 COVER, TAIL 2	1					UR PARA DBNM8 UR FOR DBNM8
6	18C–Y2475–00–P0	CUBIERTA DE COLA COVER, TAIL ASSY	1					UR PARA VRC7 UR FOR VRC7
	18C–Y2475–00–P1	CUBIERTA DE COLA COVER, TAIL ASSY	1					UR PARA BMC UR FOR BMC
	18C–Y2475–00–P2	CUBIERTA DE COLA COVER, TAIL ASSY	1					UR PARA DBNM8 UR FOR DBNM8
7	99234–00080	.EMBLEMA, YAMAHA .EMBLEM, YAMAHA	1					
8	9770N–50012	TORNILLO ROSCA HEMBRA SCREW, TAPPING	6					
9	90119–06869	TORNILLO CON ARANDELA BOLT, WITH WASHER	4					
10	90480–01868	TAPON GROMMET	2					
11	18C–F4773–00	MANIJA DE ASIENTO HANDLE, SEAT	1					
12	90338–16148	TAPON PLUG	2					
13	95812–08020	TORNILLO DE REBORDE BOLT, FLANGE	4					
14	18C–F474K–01	SOPORTE STAY 3	1					
15	18C–F474L–01	SOPORTE STAY 4	1					

www.sebamoto.com
SEBA MOTO
ONE-STOP PARTS SOLUTION

SEACUBE
ONE-STOP PARTS SOLUTION

FIG. 25 RUEDA DELANTERA FRONT WHEEL

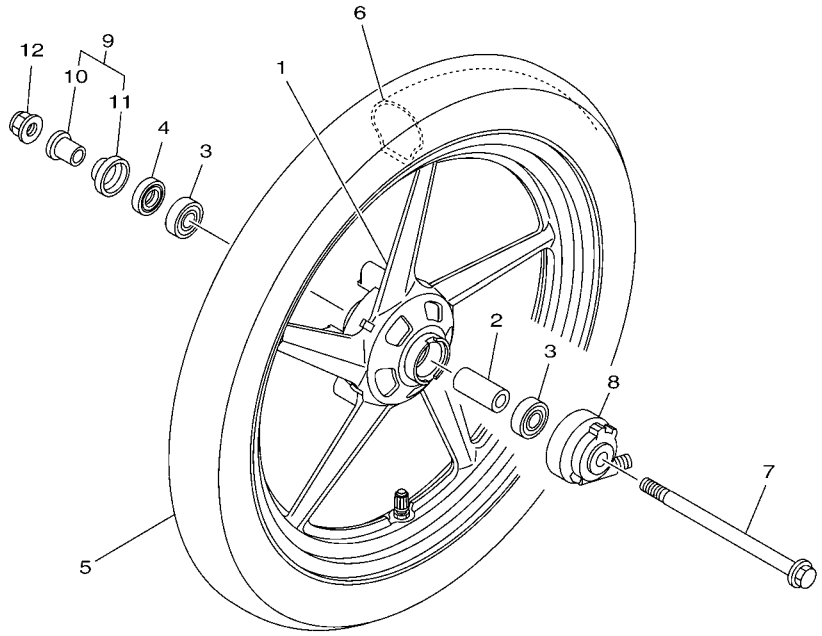

1PX1210-L250

REF. Nº	CODIGO Nº PART NO.	DESCRIPCION DESCRIPTION	1NC1					OBSERV REMARK
1	1PX–F5168–00–33	RUEDA FUNDIDA DELANTERA CAST WHEEL, FRONT	1					YB YB
2	90560–15293	SEPARADOR SPACER	1					
3	93306–202Y4	COJINETE BEARING	2					
4	93102–20857	SELLO ACEITE OIL SEAL	1					
5	94127–18848	NEUMATICO(2.75-18 S901 4PR TT) TIRE (2.75-18 S901 4PR TT)	1					
6	94227–18808	TUBO (2.75-18 TR4) TUBE (2.75-18 TR4)	1					CHENG SHIN CHENG SHIN
7	5VL–F5181–11	EJE DE LA RUEDA AXLE, WHEEL	1					
8	4GU–F5190–11	UNIDAD DE ENGRANAJE COMPLETA GEAR UNIT ASSY	1					
9	4GU–F511X–01	COLLAR COLLAR	1					
10	90387–158K1	.ESPACIADOR .COLLAR	1					
11	4GU–F5118–00	.CUBIERTA DE MASA PARA POLVO .COVER, HUB DUST	1					
12	95602–14200	TUERCA DE AUTO-CIERRE NUT, SELF-LOCKING	1					

www.seacubemoto.com

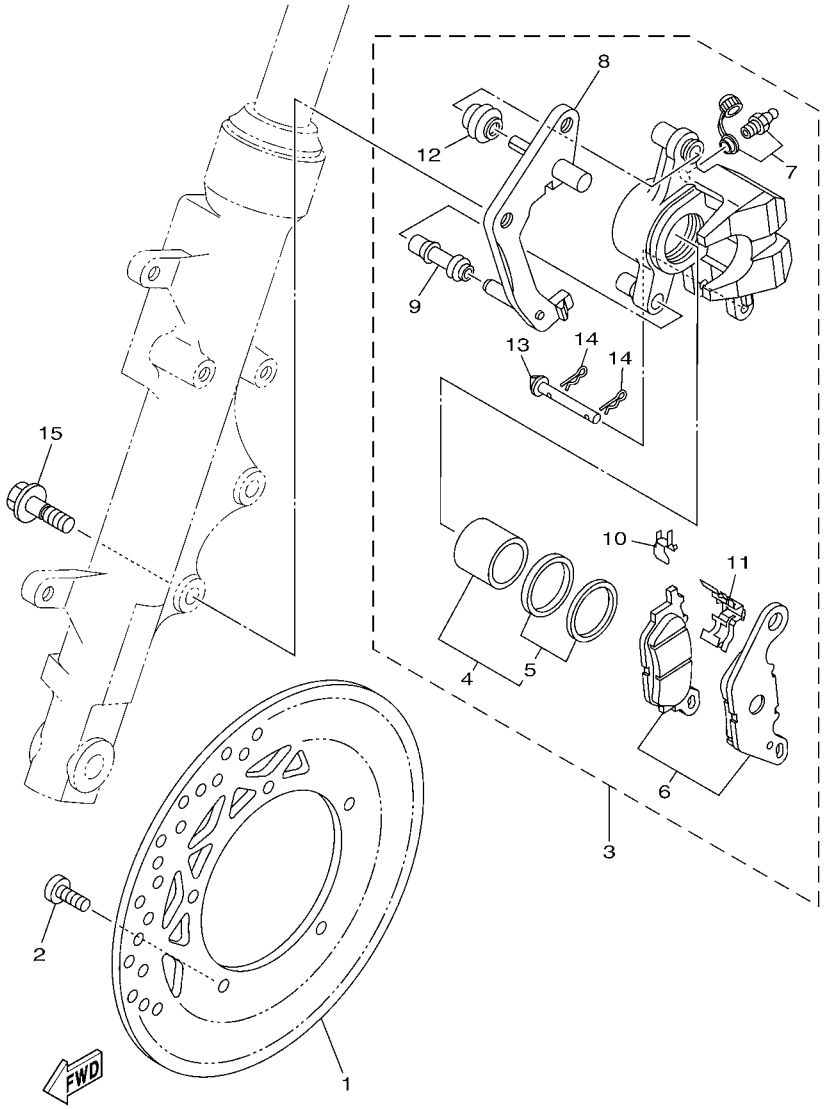

FIG. 26 CALIBRE FRENO DELANTERA FRONT BRAKE CALIPER

REF. Nº	CODIGO Nº PART NO.	DESCRIPCION DESCRIPTION	1NC1					OBSERV REMARK
1	3D9–F582U–10	DISCO DE FRENO (DERECHO) DISK, BRAKE (RIGHT)	1					
2	90111–08805	TORNILLO BOLT,HEX. SOCKET BUTTON	5					
3	3D9–F580U–01	CALIBRE COMPLETO (DERECHO) CALIPER ASSY (RIGHT)	1					
4	4S5–W0057–00	.PISTON COMPLETO PINZA .PISTON ASSY, CALIPER	1					
5	4S5–W0047–00	..JUEGO DE RETENES DE PINZA ..CALIPER SEAL KIT	1					
6	4S5–W0045–00	.JUEGO DE COJIN DE FRENO .BRAKE PAD KIT	1					
7	4S5–W0048–01	.CJTO TORNILLO DE PURGA .BLEED SCREW KIT	1					
8	4S5–F5921–01	.MENSULA DE SOPORTE .BRACKET, SUPPORT	1					
9	4S5–F5937–00	.FUNDA .BOOT 2	1					
10	4S5–F5939–00	.PRESILLA .CLIP, PAD	1					
11	4S5–F5919–00	.SOPORTE DE PASTILLAS .SUPPORT, PAD	1					
12	4S5–F5917–00	.FUNDA DE CALIBRE .BOOT, CALIPER	1					
13	4S5–F5924–01	.PASADOR .PIN, PAD	1					
14	4S5–F5925–00	.PRESILLA .CLIP	2					
15	90105–10831	TORNILLO BOLT, FLANGE	2					

www.seacubemoto.com

SEACUBE ONE-STOP PARTS SOLUTION

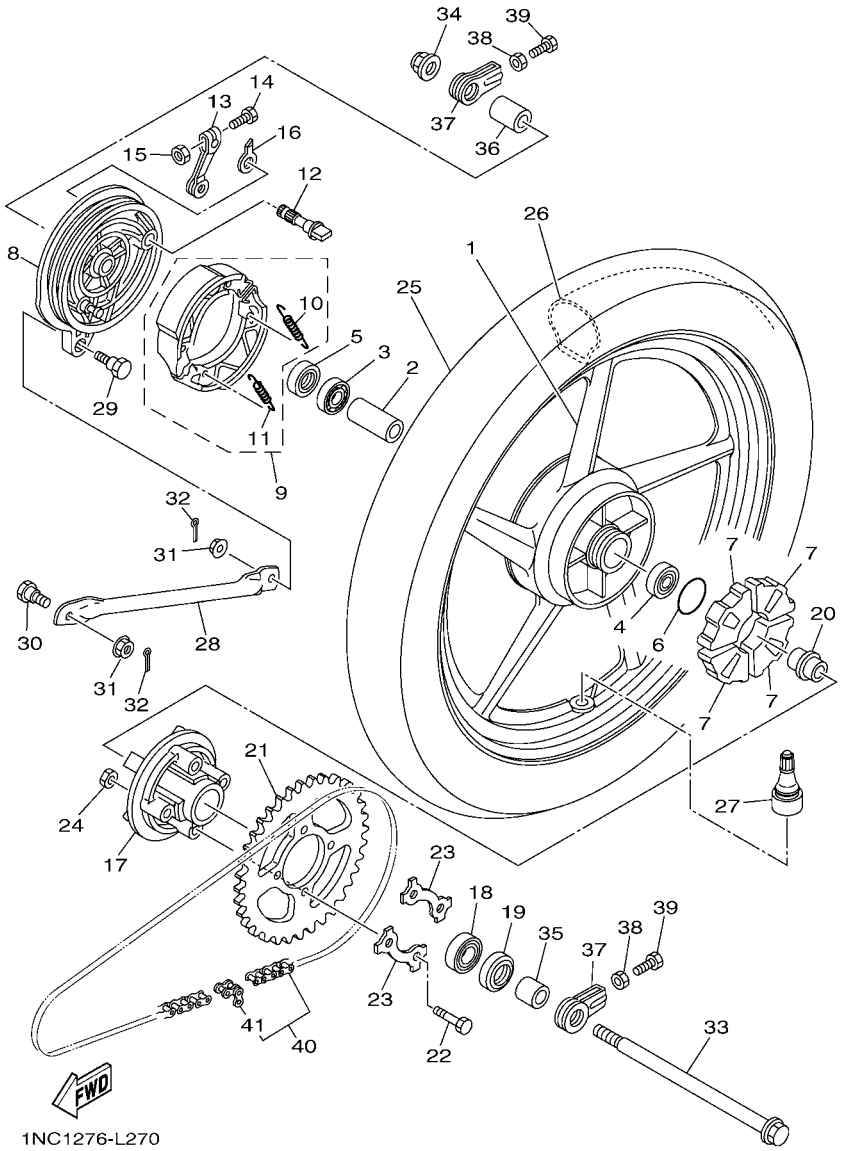

FIG. 27 RUEDA TRASERA REAR WHEEL

REF. Nº	CODIGO Nº PART NO.	DESCRIPCION DESCRIPTION	1NC1					OBSERV REMARK
1	1PX–F5338–00–33	RUEDA FUNDIDA TRASERA CAST WHEEL, REAR	1					YB YB
2	90387–15809	ESPACIADOR COLLAR	1					
3	93306–202Y4	COJINETE BEARING	1					
4	93306–252X5	COJINETE BEARING	1					
5	93104–22802	SELLO ACEITE OIL SEAL	1					
6	93210–42807	ANILLO O O-RING	1					
7	1KL–F5364–00	AMORTIGUADOR DAMPER	4					
8	5VL–F5321–01–33	PLACA DE ZAPATA DE FRENO PLATE, BRAKE SHOE	1					YB YB
9	3D9–W2533–00	JUEGO DE ZAPATA DE FRENO BRAKE SHOE KIT	1					
10	90506–12801	.RESORTE DE TENSION .SPRING, TENSION	1					
11	90506–15802	.RESORTE DE TENSION .SPRING, TENSION	1					
12	4GU–F5351–02	ARBOL DE LEVAS CAMSHAFT	1					
13	5VL–F5355–01	PALANCA DE ARBOL DE LEVAS LEVER, CAMSHAFT	1					
14	90101–06848	TORNILLO BOLT	1					
15	95302–06600	TUERCA NUT	1					
16	4GU–F533A–01	PLACA INDICADOR PLATE, INDICATOR	1					
17	5VL–F5366–00	EMBRAGUE DE MASA CLUTCH, HUB	1					
18	93306–004YL	COJINETE BEARING	1					
19	93106–26804	SELLO ACEITE OIL SEAL	1					
20	42D–F5387–00	EJE DE CORONA AXLE, SPROCKET	1					
21	5VL–F5445–01	CORONA (45D) SPROCKET, DRIVEN (45T)	1					
22	90109–08864	PERNO BOLT	4					
23	5LK–F5412–01	ARANDELA WASHER	2					
24	90179–08639	TUERCA NUT	4					
25	94109–18816	NEUMATICO (90/90-18 S180 57P) TIRE (90/90-18 S180 57P TT)	1					
26	94227–18808	TUBO (2.75-18 TR4) TUBE (2.75-18 TR4)	1					CHENG SHIN CHENG SHIN
27	93900–00826	VALVULA VALVE, RIM	1					

www.seajuberoto.com

SEA JUBERO ONE-STOP PARTS SOLUTION

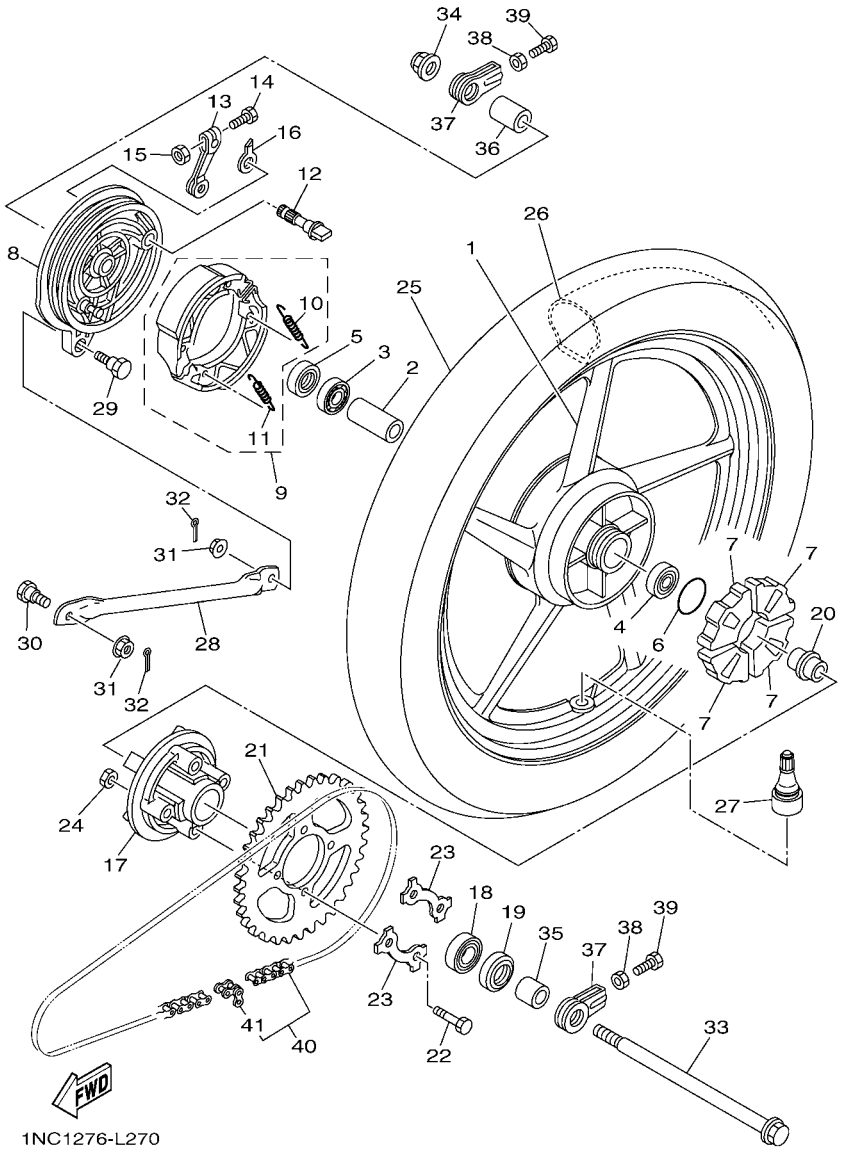

FIG. 27 RUEDA TRASERA REAR WHEEL

REF. Nº	CODIGO Nº PART NO.	DESCRIPCION DESCRIPTION	1NC1					OBSERV REMARK
28	5VL–F5371–00	BARRA TENSORA BAR, TENSION	1					
29	90109–08847	PERNO BOLT	1					
30	90109–08848	PERNO BOLT	1					
31	95702–08500	TUERCA DE BRIDA NUT, FLANGE	2					
32	91402–20012	CHAVETA PIN, COTTER	2					
33	5VL–F5381–01	EJE DE RUEDA AXLE, WHEEL	1					
34	95602–14200	TUERCA DE AUTO-CIERRE NUT, SELF-LOCKING	1					
35	42D–F5386–00	COLLAR EJE DE RUEDA DENTADA COLLAR, SPROCKET AXLE	1					
36	42D–F5377–00	COLLAR DE RUEDA COLLAR, WHEEL	1					
37	5VL–F5388–01	TIRADOR DE CADENA 1 PULLER, CHAIN 1	2					
38	95312–08600	TUERCA HEXAGONAL NUT	2					
39	90153–08804	TORNILLO HEXAGONAL SCREW, HEXAGON	2					
40	5VL–F53C0–00	CADENA (DID428 98LL) CHAIN (DID428 98LL)	1					
41	94668–83001	.CONECTOR DE CADENA (DID 428) .JOINT, CHAIN (DID 428)	1					

www.spareparts-moto.com

SEA LUBE
ONE-STOP PARTS SOLUTION

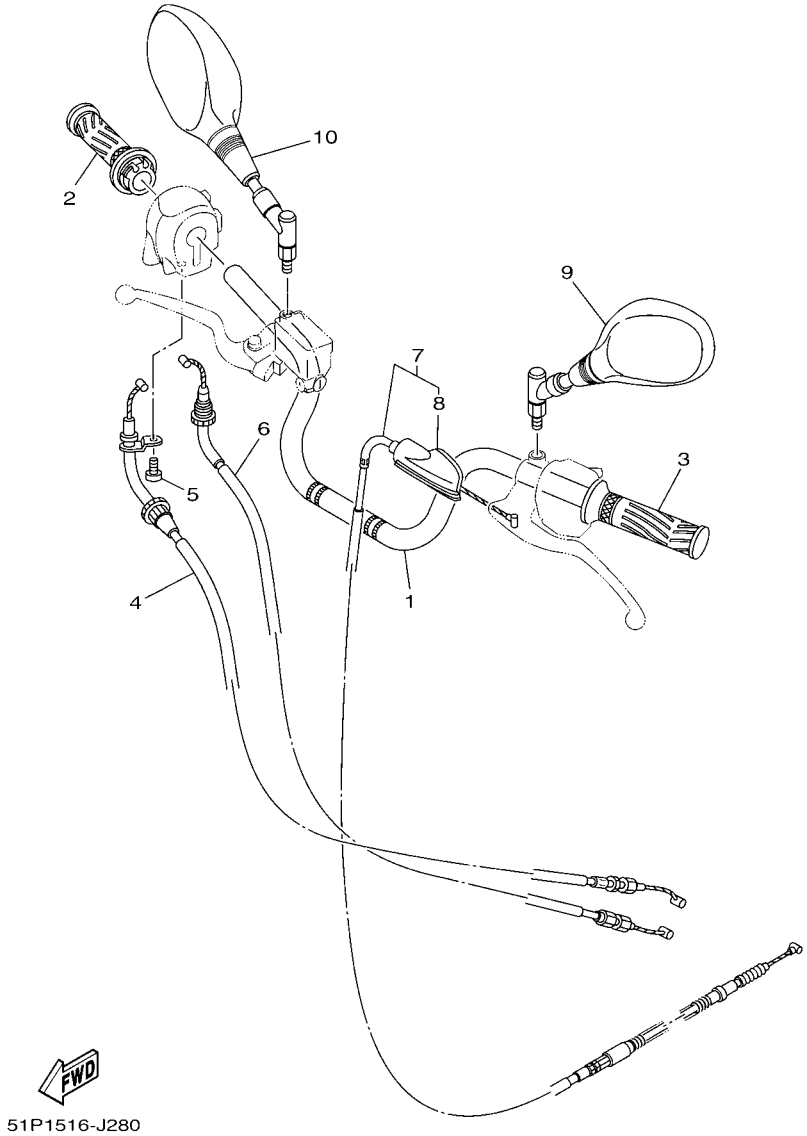

FIG. 28 MANILLAR & CABLE — STEERING HANDLE & CABLE

REF. Nº	CODIGO Nº PART NO.	DESCRIPCION DESCRIPTION	1NC1					OBSERV REMARK
1	18C–F6111–00	MANUBRIO HANDLEBAR	1					
2	2D0–F6240–00	EMPUNADURA COMPLETA GRIP ASSY	1					
3	5VL–F6241–00	EMPUNADURA GRIP	1					
4	18C–F6311–11	CABLE DE ACELERADOR 1 CABLE, THROTTLE 1	1					
5	98502–05010	TORNILLO SCREW, PAN HEAD	1					
6	18C–F6312–11	CABLE DE ACELERADOR 2 CABLE, THROTTLE 2	1					
7	5VL–F6335–03	CABLE DE EMBRAGUE CABLE, CLUTCH	1					
8	5VL–F6372–01	.CUBIERTA DE PALANCA DE MANUB 1 .COVER, HANDLE LEVER 1	1					
9	3D9–F6280–02	ESPEJO COMPLETO (IZQUIERDO) REAR VIEW MIRROR ASSY (LEFT)	1					
10	3D9–F6290–02	ESPEJO COMPLETO (DERECHO) REAR VIEW MIRROR ASSY (RIGHT)	1					

www.seacubemoto.com

SEA CUBE
ONE-STOP PARTS SOLUTION

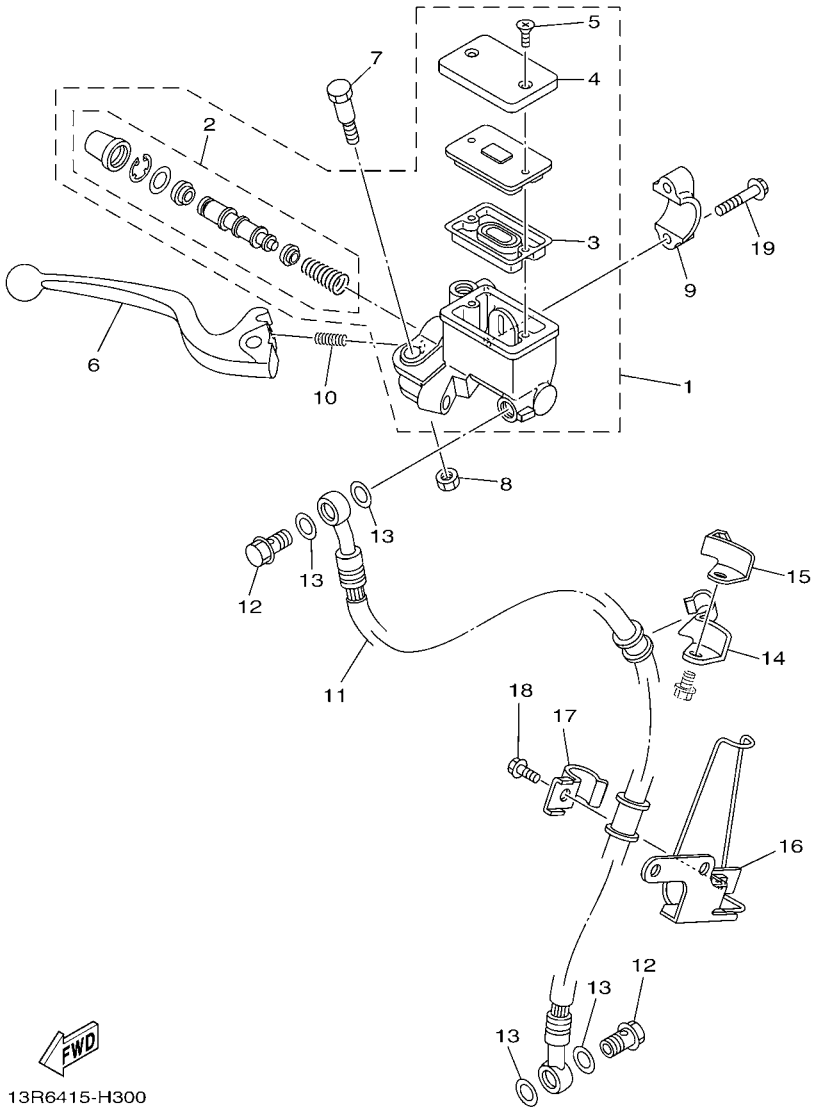

FIG. 29 CILINDRO MAESTRO DELANTERO FRONT MASTER CYLINDER

REF. Nº	CODIGO Nº PART NO.	DESCRIPCION DESCRIPTION	1NC1					OBSERV REMARK
1	2B9–W583T–02	CILINDRO MAESTRO COMPLETO MASTER CYLINDER ASSY	1					
2	3D9–W0041–02	.JUEGO DE CILINDRO MAESTRO .CYLINDER KIT, MASTER	1					
3	4KL–F5854–00	.EMPAQUE,DIAFRAGMA .DIAPHRAGM, RESERVOIR	1					
4	4KL–F5852–00	.TAPA DE TANQUE DE RESERVA .CAP, RESERVOIR	1					
5	4KL–F589H–01	.TORNILLO .SCREW	2					
6	5VL–H3922–21	PALANCA 2 LEVER 2	1					
7	3D9–F589F–01	PERNO DE PALANCA BOLT, LEVER	1					
8	3D9–F586F–01	TUERCA AUTOBLOCANTE NUT, U	1					
9	5VL–F5867–00	SOPORTE DE CILINDRO MAESTRO BRACKET, MASTER CYLINDER	1					
10	3D9–F5865–01	RESORTE DE ASIENTO SPRING, SEAT	1					
11	5VL–F5872–11	MANGUERA DE FRENO 1 HOSE, BRAKE 1	1					
12	90401–10811	PERNO DE UNION BOLT, UNION	2					
13	90201–108J9	ARANDELA PLANA WASHER, PLATE	4					
14	5VL–F5887–00	SOPORTE DE MANGUERA FRENO HOLDER, BRAKE HOSE	1					
15	5VL–F5886–00	SOPORTE DE MANGUERA FRENO HOLDER, BRAKE HOSE	1					
16	5VL–F5875–01	SOPORTE DE MANGUERA FRENO 1 HOLDER, BRAKE HOSE 1	1					
17	5VL–F5876–00	SOPORTE DE MANGUERA FRENO 2 HOLDER, BRAKE HOSE 2	1					
18	95022–06016	PERNO, DE BRIDA BOLT, FLANGE	1					
19	95022–06025	PERNO, DE BRIDA BOLT, FLANGE	2					

www.seamotorcycle.com

SEA MOTORCYCLE
ONE-STOP PARTS SOLUTION

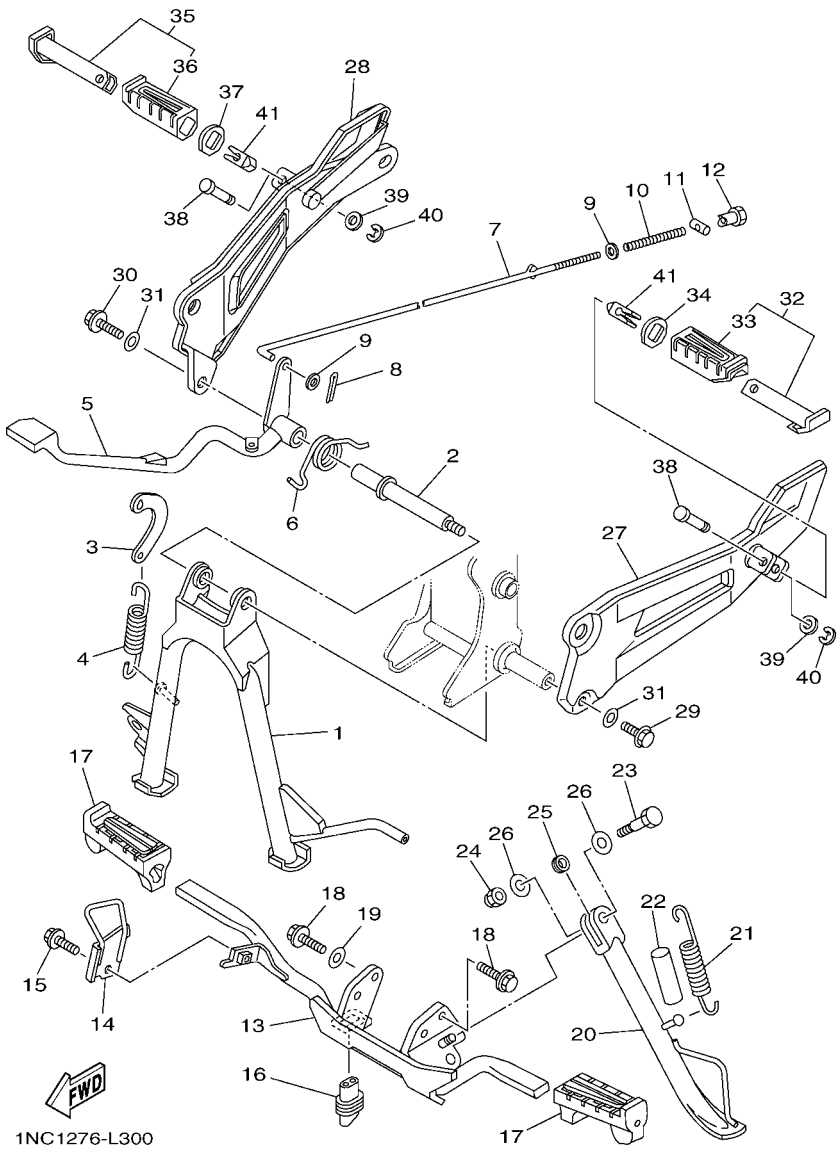

FIG. 30 SOPORTE & APOYAPIE — STAND & FOOTREST

REF. Nº	CODIGO Nº PART NO.	DESCRIPCION DESCRIPTION	1NC1					OBSERV REMARK
1	42D–F7111–00	PUNTAL PRINCIPAL STAND, MAIN	1					
2	5VL–F7112–11	EJE DE PUNTAL PRINCIPAL SHAFT, MAIN STAND	1					
3	5VL–F7115–01	CONEXION DE PUNTAL PRINCIPAL LINK, MAIN STAND	1					
4	90506–32800	RESORTE DE TENSION SPRING, TENSION	1					
5	3D9–F7211–00	PEDAL DE FRENO PEDAL, BRAKE	1					
6	90508–40801	RESORTE DE TORSION SPRING, TORSION	1					
7	5VL–F7231–01	VARILLA DE FRENO ROD, BRAKE	1					
8	91402–20012	CHAVETA PIN, COTTER	1					
9	92902–06200	ARANDELA WASHER	2					
10	90501–10806	RESORTE DE COMPRESION SPRING, COMPRESSION	1					
11	90249–12808	PASADOR PIN	1					
12	90179–06826	TUERCA NUT	1					
13	42D–F7411–00	APOYAPIE 1 FOOTREST 1	1					
14	42D–F743H–00	TOPE, 3 STOPPER, 3	1					
15	90119–06869	TORNILLO CON ARANDELA BOLT, WITH WASHER	1					
16	5VL–H2109–00	UNION, TUBO JOINT, HOSE	1					
17	5VL–F7413–00	CUBIERTA DE APOYAPIE COVER, FOOTREST	2					
18	95812–08020	TORNILLO DE REBORDE BOLT, FLANGE	2					
19	90201–08840	ARANDELA PLANA WASHER, PLATE	1					
20	42D–F7311–00	PUNTAL LATERAL STAND, SIDE	1					
21	90506–29800	RESORTE DE TENSION SPRING, TENSION	1					
22	90445–21814	TUBO HOSE	1					
23	90101–10818	TORNILLO BOLT	1					
24	90185–10813	TUERCA AUTOBLOCANTE NUT, SELF-LOCKING	1					
25	1P6–F7313–01	COLLAR COLLAR	1					
26	90201–10831	ARANDELA PLANA WASHER, PLATE	2					
27	42D–F7452–00	SOPORTE, DE APOYAPIE 1 BRACKET, FOOTREST 1	1					

www.seacubemoto.com

SEA CUBE
ONE-STOP PARTS SOLUTION

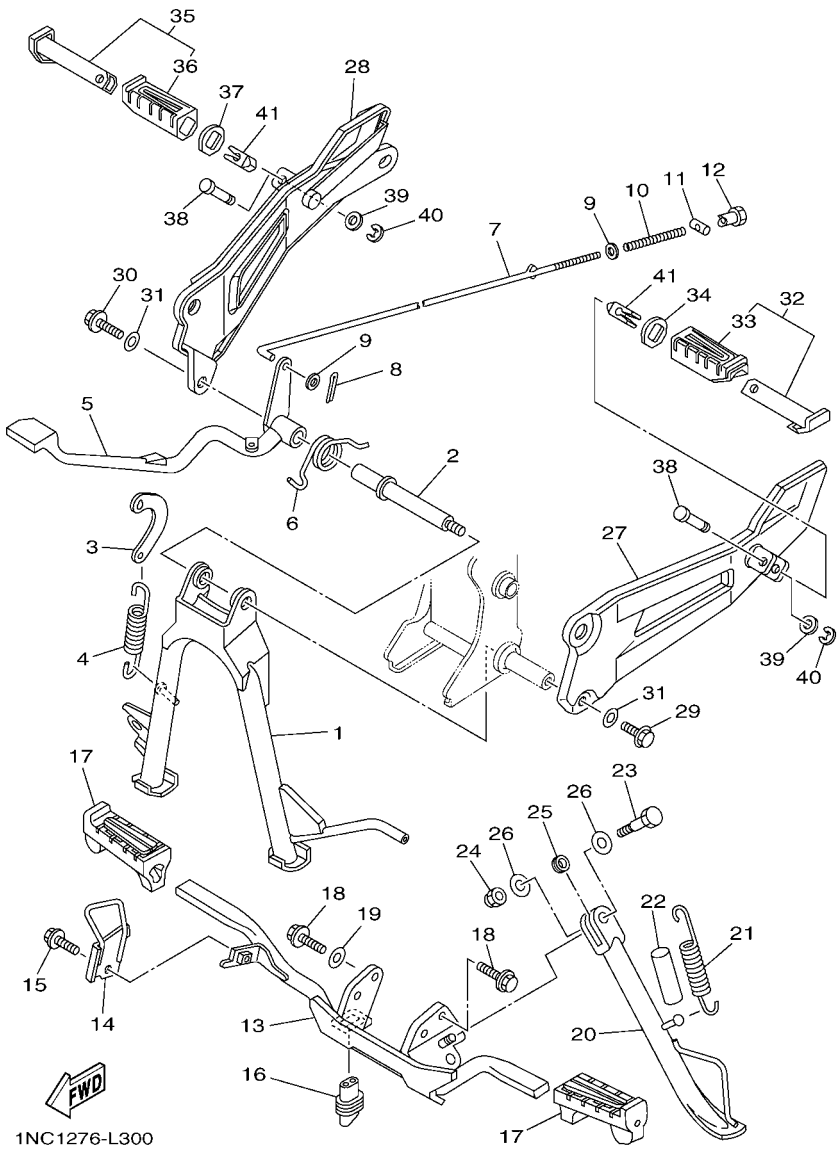

FIG. 30 SOPORTE & APOYAPIE — STAND & FOOTREST

REF. Nº	CODIGO Nº PART NO.	DESCRIPCION DESCRIPTION	1NC1					OBSERV REMARK
28	42D–F7462–00	SOPORTE, DE APOYAPIE 2 BRACKET, FOOTREST 2	1					
29	95812–08020	TORNILLO DE REBORDE BOLT, FLANGE	1					
30	95812–08025	TORNILLO DE REBORDE BOLT, FLANGE	1					
31	92902–08200	ARANDELA WASHER	2					
32	5VL–F7430–01	APOYAPIE POSTERIOR COMPLETO 1 REAR FOOTREST ASSY 1	1					
33	5VL–F7433–00	.CUBIERTA APOYAPIE TRASERO .COVER, REAR FOOTREST	1					
34	5VL–F7445–01	PLACE 1 PLATE 1	1					
35	5VL–F7440–01	APOYAPIE POSTERIOR COMPLETO 2 REAR FOOTREST ASSY 2	1					
36	5VL–F7444–00	.CUBIERTA APOYAPIE TRASERO .COVER, REAR FOOTREST	1					
37	5VL–F7445–01	PLACE 1 PLATE 1	1					
38	90249–06800	PASADOR PIN	2					
39	92902–06200	ARANDELA WASHER	2					
40	99002–05600	PRESILLA REDONDA CLIP	2					
41	5VL–F7414–00	AMORTIGUADOR DE APOYAPIE DAMPER, FOOTREST	2					

www.seacubemoto.com

SEACUBE ONE-STOP PARTS SOLUTION

SEACUBE
ONE-STOP PARTS SOLUTION

FIG. 31 GENERADOR GENERATOR

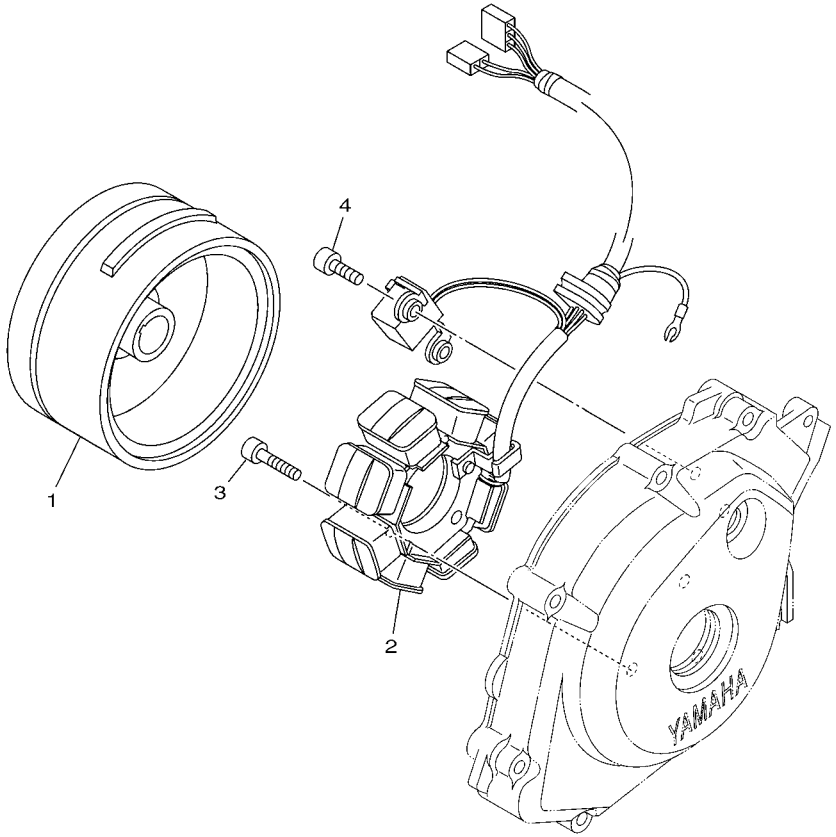

2D01415-D311

REF. Nº	CODIGO Nº PART NO.	DESCRIPCION DESCRIPTION	1NC1					OBSERV REMARK
1	2D0–H1450–11	ROTOR COMPLETO ROTOR ASSY	1					
2	2D0–H1410–01	ESTATOR COMPLETO STATOR ASSY	1					
3	91312–06025	TORNILLO BOLT	3					
4	91312–06014	TORNILLO BOLT	2					

www.seacubemoto.com

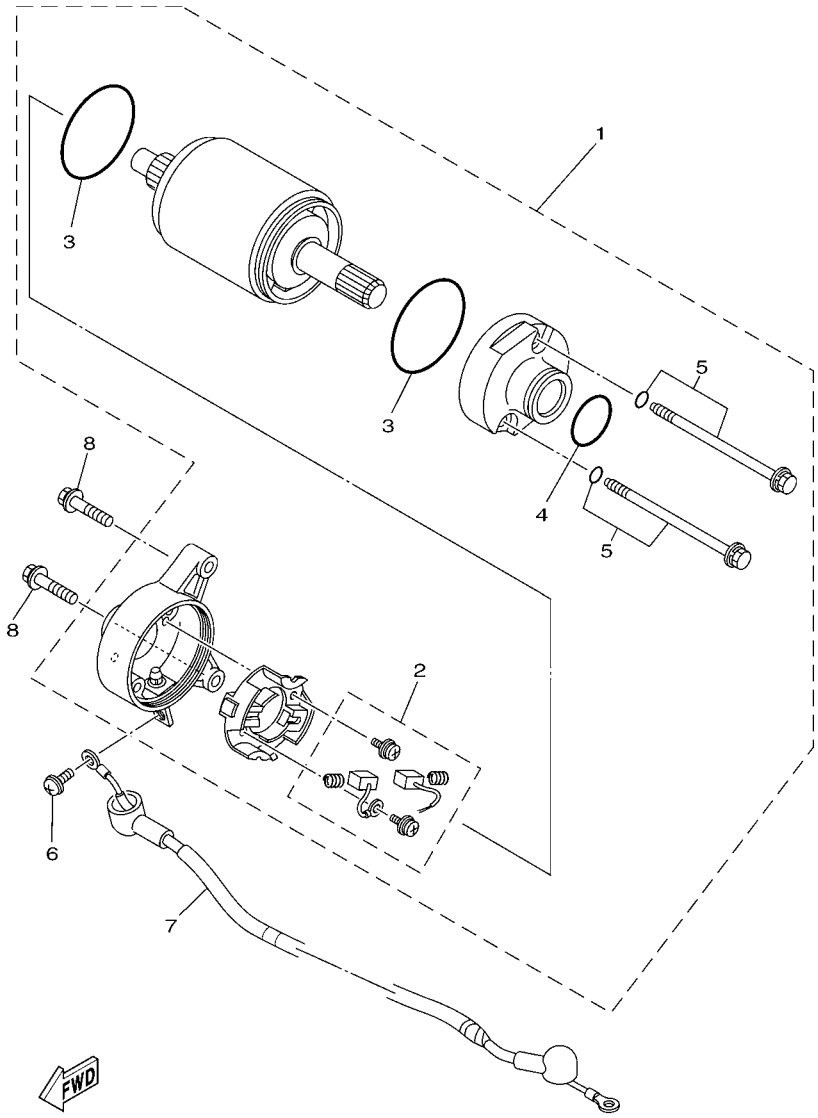

1JP1415-J320

FIG. 32 MOTOR DE ARRANQUE STARTING MOTOR

REF. Nº	CODIGO Nº PART NO.	DESCRIPCION DESCRIPTION	1NC1					OBSERV REMARK
1	5VL–H1890–00	MOTOR DE ARRANQUE COMPLETO MOTOR ASSY	1					
2	4FP–H1801–00	.JUEGO DE ESCOBILLA .BRUSH SET	1					
3	93210–55669	.ANILLO O .O-RING	2					
4	4FP–H182L–00	.ANILLO EN O .O-RING 1	1					
5	4FP–H1828–01	.TORNILLO DE EMPUJE 2 .SCREW 2	2					
6	98902–05008	TORNILLO DE AJUSTE SCREW, BIND	1					
7	5VL–H183G–01	CABLE DEL MOTOR COMPL. CORD COMP.	1					
8	95022–06025	PERNO, DE BRIDA BOLT, FLANGE	2					

www.seacubemoto.com

SEACUBE ONE-STOP PARTS SOLUTION

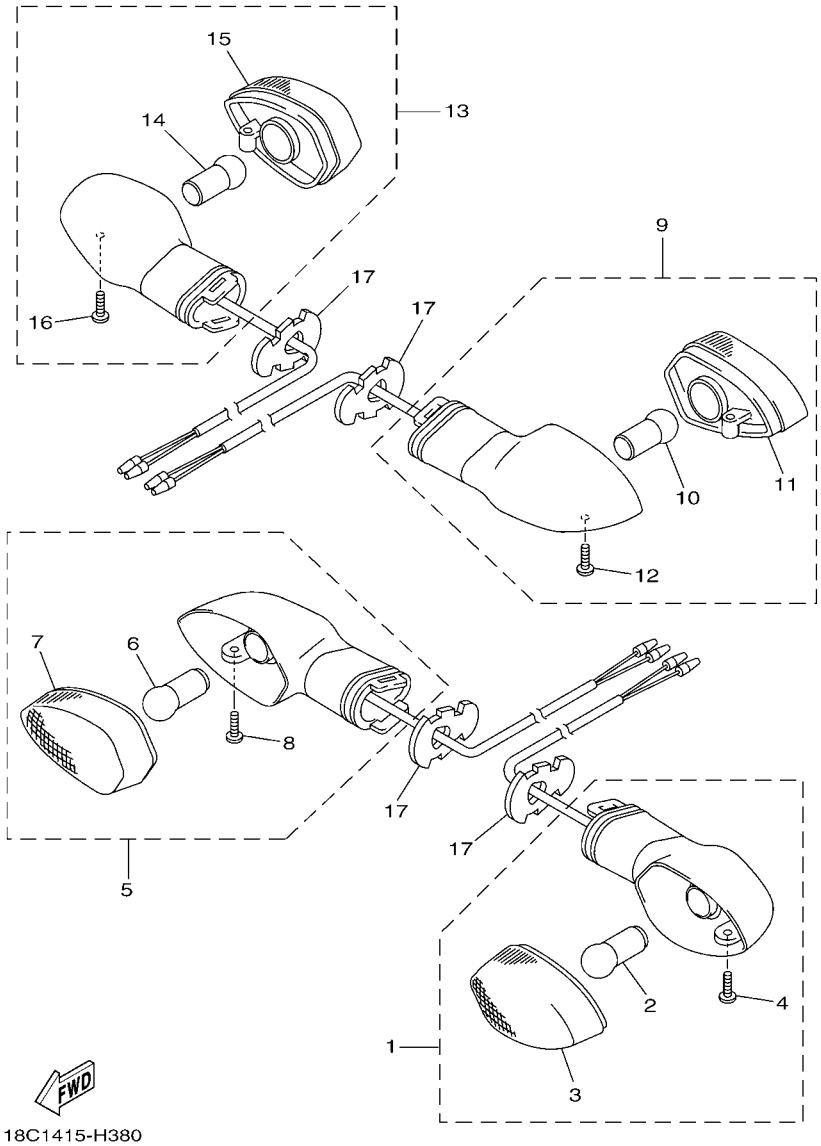

FIG. 33 LUZ DE DESTELLADOR FLASHER LIGHT

REF. Nº	CODIGO Nº PART NO.	DESCRIPCION DESCRIPTION	1NC1					OBSERV REMARK
1	3D9–H3310–10	DESTELLADOR DE LUZ DELANT. FRONT FLASHER LIGHT ASSY 1	1					
2	3D9–H3311–10	.BOMBILLA (12V-10W) .BULB, FLASHER (12V-10W)	1					
3	3D9–H333A–00	.LENTES COMPLETO 1 .LENS COMP 1	1					
4	3D9–H3333–10	.TORNILLO ACCESORIO DE LENTE .SCREW, LENS FITTING	1					
5	3D9–H3320–10	DESTELLADOR DE LUZ DELANT. FRONT FLASHER LIGHT ASSY 2	1					
6	3D9–H3311–10	.BOMBILLA (12V-10W) .BULB, FLASHER (12V-10W)	1					
7	3D9–H334A–00	.LENTES COMPLETO 2 .LENS COMP 2	1					
8	3D9–H3333–10	.TORNILLO ACCESORIO DE LENTE .SCREW, LENS FITTING	1					
9	3D9–H3330–10	DESTELLADOR DE LUZ TRAS.COMPL. REAR FLASHER LIGHT ASSY 1	1					
10	3D9–H3311–10	.BOMBILLA (12V-10W) .BULB, FLASHER (12V-10W)	1					
11	3D9–H334A–00	.LENTES COMPLETO 2 .LENS COMP 2	1					
12	3D9–H3333–10	.TORNILLO ACCESORIO DE LENTE .SCREW, LENS FITTING	1					
13	3D9–H3340–10	DESTELLADOR DE LUZ TRAS.COMPL. REAR FLASHER LIGHT ASSY 2	1					
14	3D9–H3311–10	.BOMBILLA (12V-10W) .BULB, FLASHER (12V-10W)	1					
15	3D9–H333A–00	.LENTES COMPLETO 1 .LENS COMP 1	1					
16	3D9–H3333–10	.TORNILLO ACCESORIO DE LENTE .SCREW, LENS FITTING	1					
17	3D9–H3318–10	SOPORTE DE DESTELLADOR 1 STAY, FLASHER 1	4					

www.motoscooter.com

SEA LUBE ONE-STOP PARTS SOLUTION

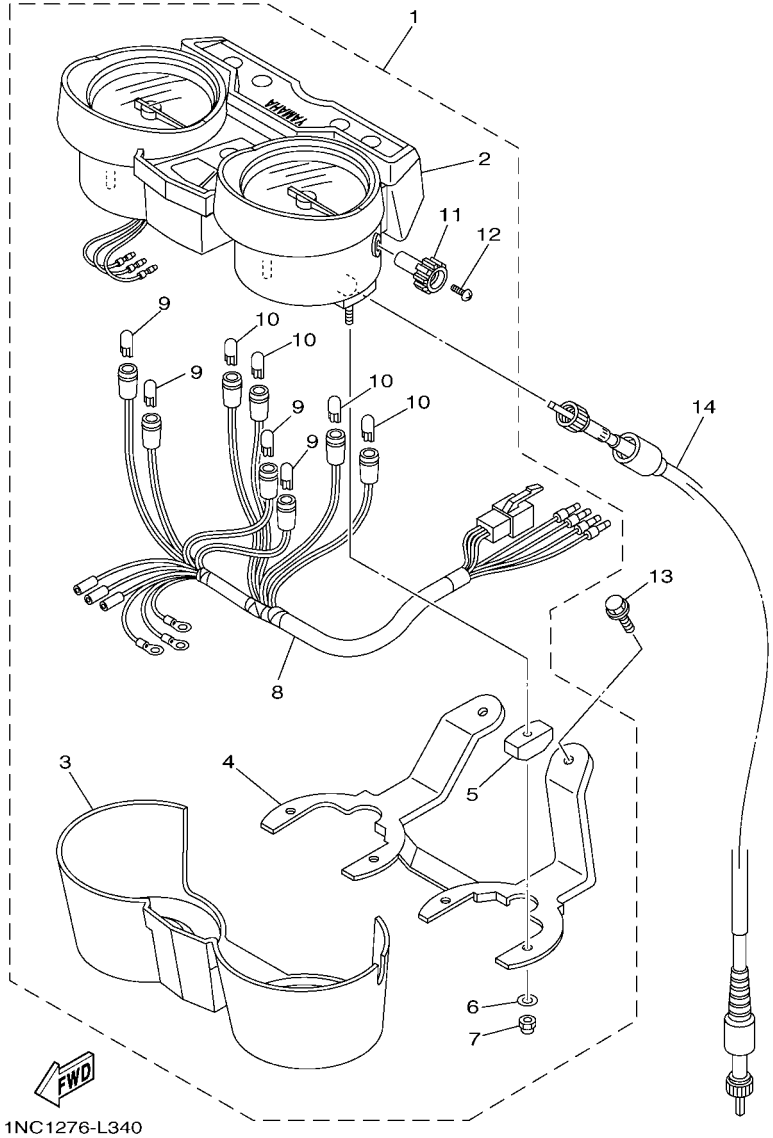

FIG. 34 MEDIDOR METER

REF. Nº	CODIGO Nº PART NO.	DESCRIPCION DESCRIPTION	1NC1					OBSERV REMARK
1	1PX–H3500–00	METRO COMPLETO METER ASSY	1					
2	1PX–H350A–00	.MEDIDOR COMPLETA .METER COMP.	1					
3	18C–H353H–00	.CAJA INFERIOR .CASE, UNDER	1					
4	5VL–H350E–00	.SOPORTE .BRACKET	1					
5	5VL–H3543–00	.AMORTIGUADOR DE SOPORTE .DAMPER, BRACKET	4					
6	18C–H3524–00	.ARANDELA ESPECIAL .WASHER, SPECIAL	4					
7	5VL–H354P–00	.TUERCA .NUT	4					
8	1PX–H3509–00	.ENCASTRE DE CABLE COMPLETO .SOCKET CORD ASSY	1					
9	4FP–H3517–10	.AMPOLLETA (12V-1.7W) .BULB (12V-1.7W)	4					
10	4GU–H3517–10	.AMPOLLETA (14V-3W) .BULB (14V-3W)	4					
11	5VL–H357H–00	.PERILLA .KNOB	1					
12	5VL–H353S–00	.TORNILLO ACCESORIO DE PERILLA .SCREW, KNOB FITTING	1					
13	95022–06016	PERNO, DE BRIDA BOLT, FLANGE	2					
14	5VL–H3550–12	CABLE DE VELOCIMETRO COMPLETO SPEEDOMETER CABLE ASSY	1					

www.sebikpemoto.com

SEBIKPEMOTO ONE-STOP PARTS SOLUTION

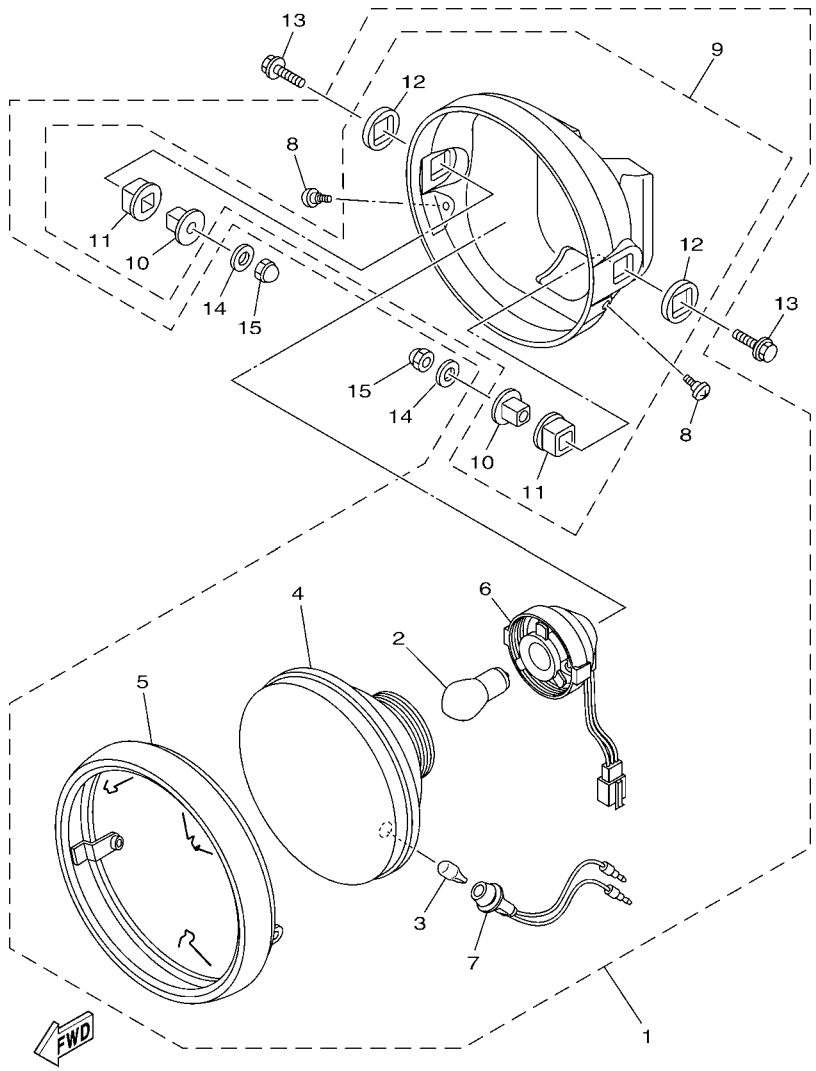

13R6415-H390

FIG. 35 FARO DELANTERO HEADLIGHT

REF. Nº	CODIGO Nº PART NO.	DESCRIPCION DESCRIPTION	1NC1					OBSERV REMARK
1	5VL–H4300–23	FARO DELANTERO COMPLETO HEADLIGHT ASSY	1					
2	5VL–H4314–20	.BOMBILLA (12V-35/35W) .BULB, HEADLIGHT (12V-35/35W)	1					
3	5VL–H4347–10	.BOMBILLA (12V-5W) .BULB (12V-5W)	1					
4	5VL–H4310–22	.UNIDAD DE FARO DELANTERO COMPL .HEADLIGHT UNIT ASSY	1					
5	5VL–H4315–21	.ARO DE FARO DELANTERO .RIM, HEADLIGHT	1					
6	5VL–H4312–10	.CABLE COMPLETA .CORD ASSY	1					
7	5VL–H4159–10	.CABLE DE FARO DELANTERO .CORD, HEADLIGHT	1					
8	5VL–H4526–00	.TORNILLO .SCREW	2					
9	5VL–H4330–22	.CUERPO COMPLETO .BODY ASSY	1					
10	5VL–H4145–00	..COLLAR ACCESORIO DE CUERPO ..COLLAR, BODY FITTING	2					
11	5VL–H4163–00	..AMORTIGUADOR ..DAMPER	2					
12	5VL–H4164–00	..AMORTIGUADOR ..DAMPER	2					
13	95023–08030	TORNILLO BOLT	2					
14	90201–08830	ARANDELA PLANA WASHER, PLATE	2					
15	95302–08800	TUERCA NUT, CROWN	2					

www.seacubemoto.com

SEACUBE ONE-STOP PARTS SOLUTION

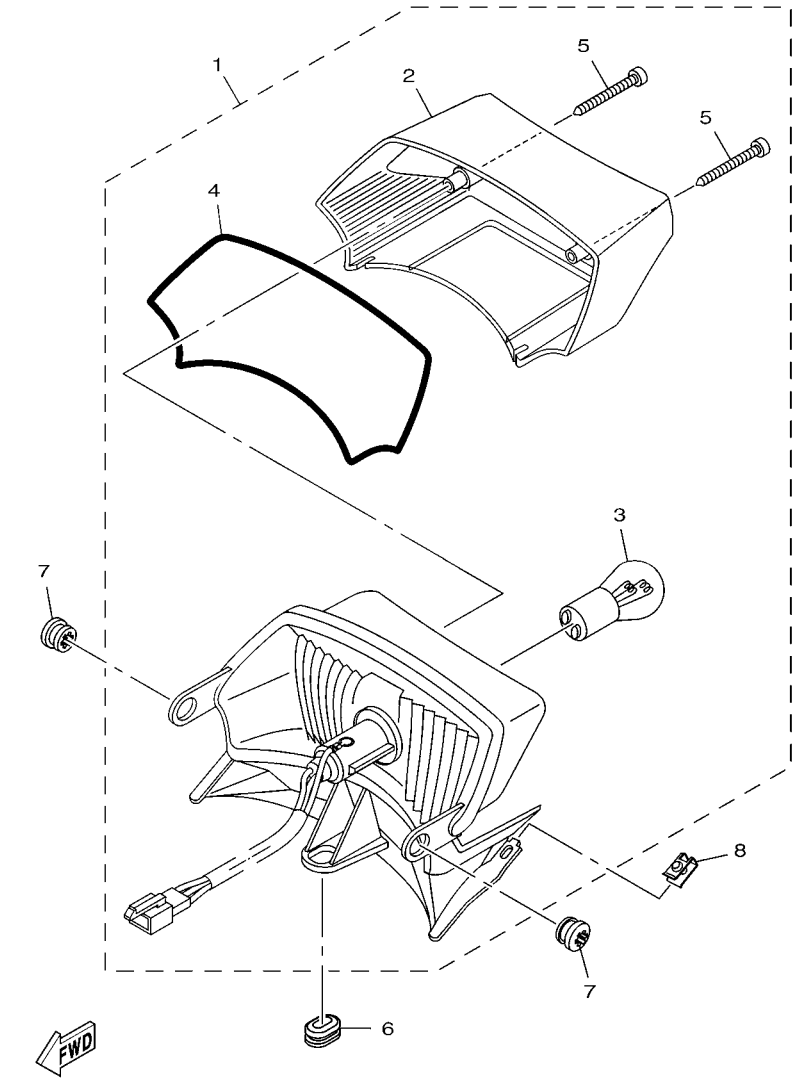

FIG. 36 LUZ DE COLA — TAILLIGHT

REF. Nº	CODIGO Nº PART NO.	DESCRIPCION DESCRIPTION	1NC1					OBSERV REMARK
1	18C–H4700–01	FARO TRASERO COMPLET. TAILLIGHT ASSY	1					
2	18C–H4721–01	.LENTE DE FARO TRASERO .LENS, TAILLIGHT	1					
3	3D9–H4714–10	.BOMBILLA (12V-21/5W) .BULB (12V-21/5W)	1					
4	18C–H4704–00	.EMPAQUETADURA DE LUZ DE COLA .GASKET, TAILLIGHT	1					
5	3D9–H4724–10	.TORNILLO ACCESORIO DE LENTE .SCREW, LENS FITTING	2					
6	90480–01868	TAPON GROMMET	1					
7	90480–13810	TAPON GROMMET	2					
8	90183–05807	TUERCA DE RESORTE NUT, SPRING	2					

www.seacubemoto.com

SEACUBE
ONE-STOP PARTS SOLUTION

FIG. 37 INTERRUPTOR DE MANILLAR&PALANC HANDLE SWITCH & LEVER

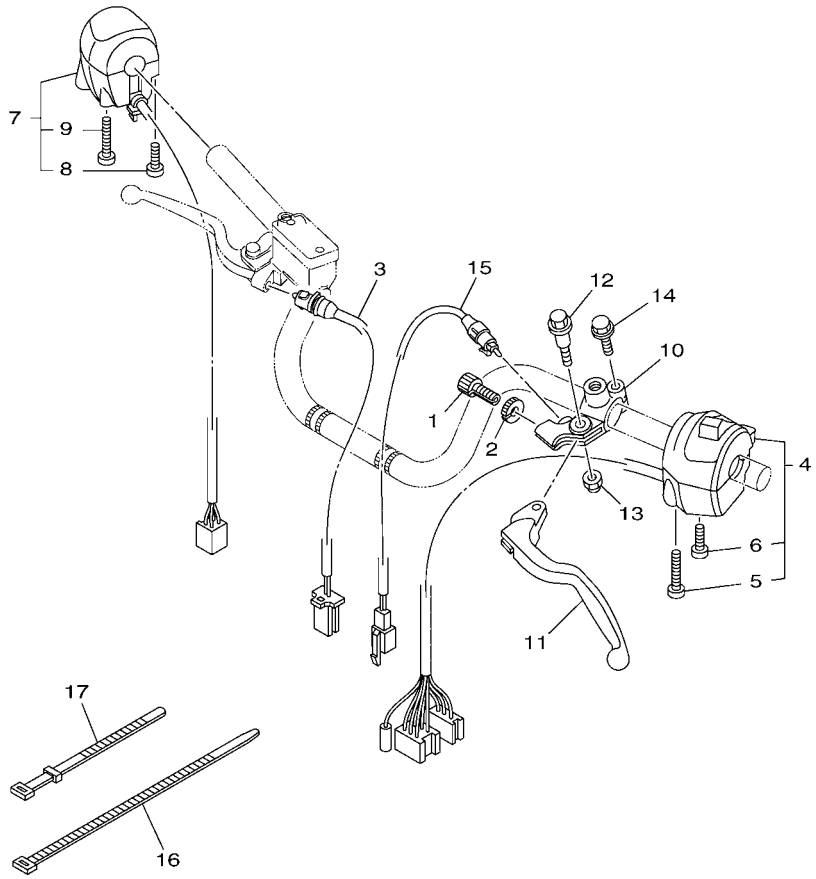

1NC1276-L370

REF. Nº	CODIGO Nº PART NO.	DESCRIPCION DESCRIPTION	1NC1					OBSERV REMARK
1	90123–08813	PERNO BOLT	1					
2	90179–08862	TUERCA NUT	1					
3	5VL–H3980–01	INTERRUP. DE PARADA DELANTERO FRONT STOP SWITCH ASSY	1					
4	5VL–H3973–01	INTERRUPTOR DE MANIJA 3 SWITCH, HANDLE 3	1					
5	98507–05043	.TORNILLO DE CABEZA PLANA .SCREW, PAN HEAD	1					
6	98507–05025	.TORNILLO DE CABEZA PLANA .SCREW, PAN HEAD	1					
7	42D–H3976–00	INTERRUPTOR DE MANIJA 1 SWITCH, HANDLE 1	1					
8	98507–05030	.TORNILLO DE CABEZA PLANA .SCREW, PAN HEAD	1					
9	98507–05050	.TORNILLO DE CABEZA PLANA .SCREW, PAN HEAD	1					
10	4FP–H2911–00	SOPORTE DE LEVA 1 HOLDER, LEVER 1	1					
11	5VL–H3912–00	PALANCA 1 LEVER 1	1					
12	90109–06850	PERNO BOLT	1					
13	95602–06100	TUERCA U NUT, U	1					
14	97590–06522	PERNO CON ARANDELA BOLT, WITH WASHER	1					
15	5VL–H2917–11	INTERRUPTOR SWITCH	1					
16	90464–70801	BRIDA CLAMP	1					
17	4TU–H3936–00	BANDA DE CABLE DE INTERRUPTOR BAND, SWITCH CORD	2					

www.seacdemo.com

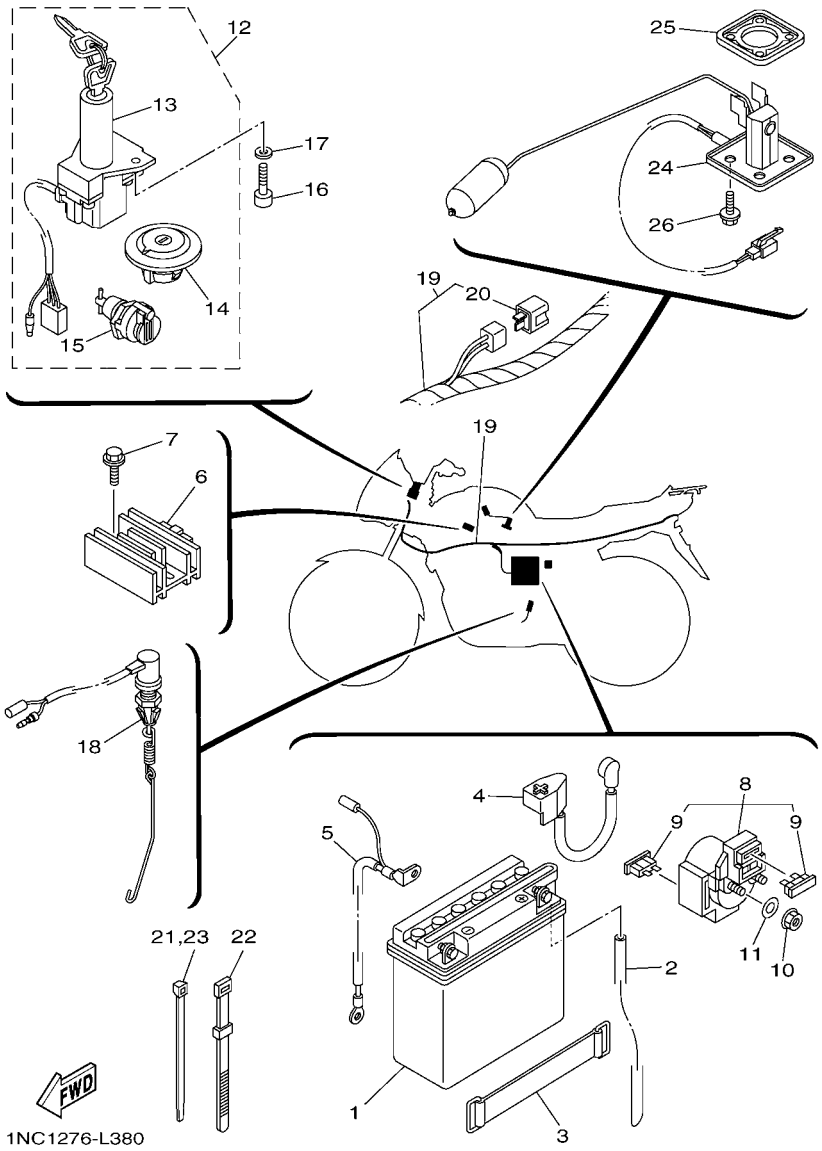

FIG. 38 EQUIPO ELECTRICO 1 ELECTRICAL 1

REF. Nº	CODIGO Nº PART NO.	DESCRIPCION DESCRIPTION	1NC1					OBSERV REMARK
1	5VL–H2100–00	BATERIA COMPLETA (CB5L-B) BATTERY ASSY (CB5L-B)	1					
2	90445–08830	TUBO HOSE	1					
3	5VL–H2131–01	TIRANTE DE BATERIA BAND, BATTERY	1					
4	5VL–H2115–00	CABLE CONDUCTOR POSITIVO WIRE, PLUS LEAD	1					
5	5VL–H2116–00	CABLE CONDUCTOR NEGATIVO WIRE, MINUS LEAD	1					
6	2D0–H1960–00	RECTIFICADOR Y REGULADOR RECTIFIER & REGULATOR ASSY	1					
7	95802–06020	TORNILLO DE REBORDE BOLT, FLANGE	2					
8	5VL–H1940–01	CONJUNTO ARRANCADOR RELEVO STARTER RELAY ASSY	1					
9	4FP–H2151–00	.FUSIBLE (15A) .FUSE (15A)	2					
10	95302–06600	TUERCA NUT	2					
11	90201–068C2	ARANDELA PLANA WASHER, PLATE	2					
12	1NC–H2021–00	JUEGO DE LLAVE KEY SET	1					
13	1NC–H2501–00	.LLAVE DE IGNICION COMPLT .MAIN SWITCH STEERING LOCK	1					
14	5VL–F4610–02	.TAPA COMPLETA .CAP ASSY	1					
15	5VL–F1780–01	.CERRADURA COMPLETA .LOCK ASSY	1					
16	91312–06020	TORNILLO BOLT	2					
17	90201–068C2	ARANDELA PLANA WASHER, PLATE	2					
18	3S9–H2530–01	INTERRUPTOR DE PARADA COMPLETO STOP SWITCH ASSY	1					
19	1NC–H2590–00	CONJUNTO DE CABLES WIRE HARNESS ASSY	1					
20	5VL–H1980–10	.CONJUNTO DIODO .DIODE ASSY	1					
21	90464–35820	BRIDA CLAMP	3					
22	5VL–H3936–00	BANDA DE CABLE DE INTERRUPTOR BAND, SWITCH CORD	1					
23	90464–35820	BRIDA CLAMP	2					
24	18C–H5752–01	UNIDAD TRANSM. MED. COMBUST. SENDER UNIT ASSY, FUEL METER	1					
25	4FP–H5753–00	EMPAQUE DE UNIDAD TRANSMISORA GASKET, SENDER UNIT	1					
26	90119–05022	TORNILLO CON ARANDELA BOLT, WITH WASHER	4					

www.seatbemotor.com
SEA LUBE
ONE-STOP PARTS SOLUTION

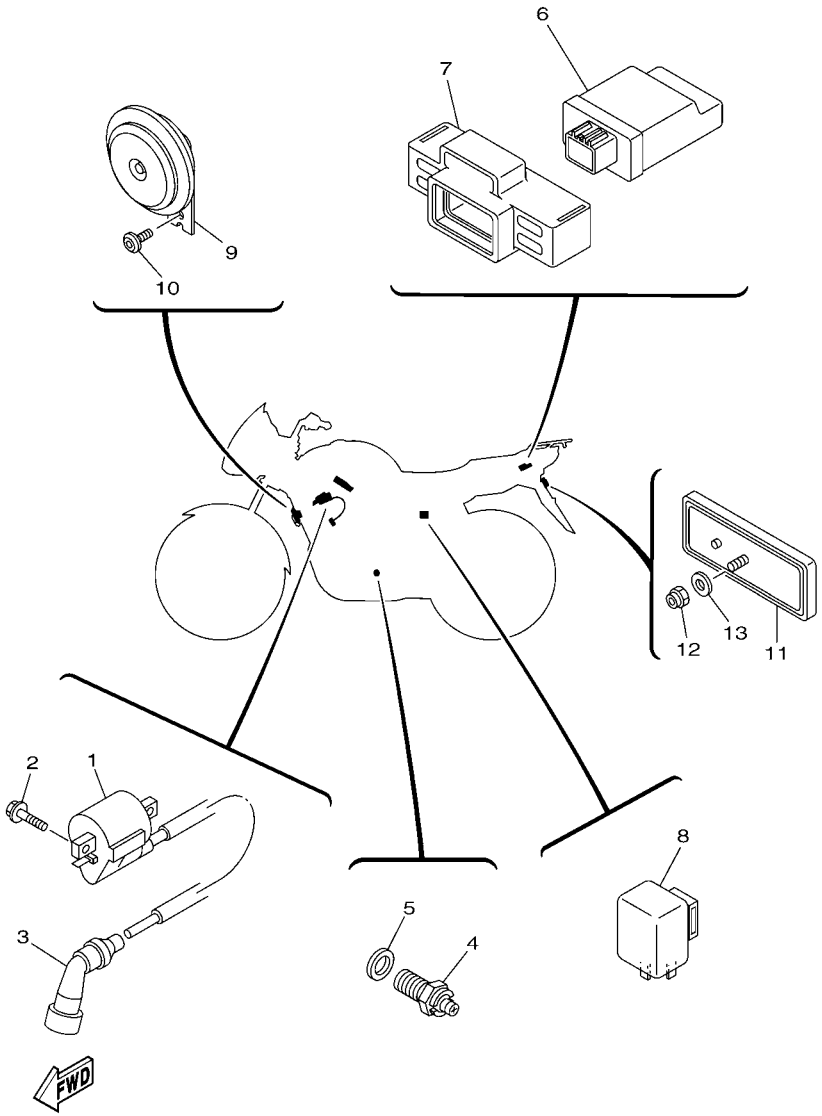

FIG. 39 EQUIPO ELECTRICO 2 ELECTRICAL 2

REF. Nº	CODIGO Nº PART NO.	DESCRIPCION DESCRIPTION	1NC1					OBSERV REMARK
1	5VL–H2310–01	BOBINA DE ENCENDIDO COMPLETA IGNITION COIL ASSY	1					
2	95022–06016	PERNO, DE BRIDA BOLT, FLANGE	2					
3	4FP–H2370–01	TAPON DE BUJIA COMPLT PLUG CAP ASSY	1					
4	5VL–H2540–01	INTERRUPTOR NEUTRAL COMPL NEUTRAL SWITCH ASSY	1					
5	90430–10819	JUNTA GASKET	1					
6	5VL–H5540–11	UNIDAD C.D.I. COMPLETA C.D.I. UNIT ASSY	1					
7	1PX–H5546–00	BANDA BAND	1					
8	18C–H3350–01	RELE DE DESTELLADOR COMPL. FLASHER RELAY ASSY	1					
9	18C–H3371–10	BOCINA HORN	1					
10	90149–06833	TORNILLO DE REGLAJE SCREW	1					
11	4FP–H5130–21	REFLECTOR TRASERO COMPLETO REAR REFLECTOR ASSY	1					
12	95602–05100	TUERCA U NUT, U	1					
13	90201–05802	ARANDELA PLANA WASHER, PLATE	1					

www.seaubemoto.com

SEA LUBE ONE-STOP PARTS SOLUTION

INDICE NUMERICO
NUMERICAL INDEX

CODIGO Nº PART NO.	REF. Nº
2UJ–11133–10	1 – 2
22F–11134–10	1 – 3
5KA–12113–00	3 – 5
30S–14325–00	7 – 19
5PA–21568–01	23 – 3
5VL–E1111–01	1 – 1
5VL–E111F–00	4 – 5
5VL–E1161–00	1 – 8
5VL–E1166–00	9 – 4
4FP–E1167–00	9 – 3
5VL–E1181–00	1 – 16
5VL–E1185–00	1 – 7
5VL–E1186–00	1 – 11
5VL–E1310–00	1 – 19
5VL–E1351–10	1 – 20
5VL–E1422–00	2 – 6
5VL–E1454–00	2 – 8
5VL–E1631–00	2 – 11
5VL–E1633–00	2 – 12
5VL–E1651–00	2 – 5
5VL–E1681–00	2 – 3
5VL–E2111–00	3 – 1
5VL–E2116–00	3 – 4
5VL–E2117–01	3 – 7
5VL–E2118–00	3 – 6
5VL–E2119–00	3 – 3
5VL–E2121–00	3 – 2
5VL–E2151–00	3 – 8
5VL–E2156–00	3 – 10
5VL–E2171–00	4 – 1
5VL–E2176–00	4 – 7
5VL–E2210–01	4 – 15
5VL–E2213–10	4 – 16
5VL–E2231–00	4 – 11
5VL–E2241–00	4 – 12
5VL–E3300–01	5 – 1
5VL–E3324–00	5 – 11
5VL–E3325–00	5 – 2
5VL–E3329–00	5 – 6
4FP–E3411–00	5 – 10
5VL–E3451–00	5 – 12
4P2–E3586–00	6 – 1
5LB–E4153–00	7 – 22
1PX–E4196–00	7 – 27
4P2–E4197–00	7 – 26
5LB–E4214–00	7 – 5
5FY–E4251–00	7 – 24
4P2–E4286–00	7 – 4

CODIGO Nº PART NO.	REF. Nº
5LB–E4292–00	7 – 25
5LB–E4293–00	7 – 12
1PX–E4301–00	7 – 1
4JP–E4323–00	7 – 21
5RS–E4341–00	7 – 6
5RS–E4341–10	7 – 7
5LB–E4342–17	7 – 9
288–E4343–60	7 – 8
50M–E4355–00	7 – 14
4P2–E4371–00	7 – 15
5LB–E4384–00	7 – 20
5LB–E4385–00	7 – 16
5LB–E4386–00	7 – 17
1BV–E4390–00	7 – 18
5VL–E4411–00	6 – 6
5VL–E4412–00	6 – 7
5VL–E4417–00	6 – 16
5VL–E4424–01	6 – 15
5VL–E4437–00	6 – 10
5VL–E443E–00	6 – 14
5VL–E4450–01	6 – 8
5VL–E4452–00	6 – 11
4P2–E4453–00	6 – 9
5VL–E4462–00	6 – 12
5LB–E4592–00	7 – 23
5VL–E4613–00	8 – 12
5VL–E4628–00	8 – 4
1PX–E4710–00	8 – 1
1PX–E4738–00	8 – 9
5VL–E4758–00	8 – 3
5VL–E5191–00	10 – 10
5VL–E5362–00	10 – 19
5VL–E5411–10	10 – 1
5VL–E5418–02	10 – 12
5VL–E5421–00	10 – 14
5VL–E5441–01	9 – 11
5VL–E5451–10	10 – 2
5VL–E5461–10	10 – 15
5VL–E5512–00	12 – 1
5VL–E5517–00	12 – 5
5VL–E5521–00	12 – 2
5VL–E5532–00	12 – 3
4FP–E5580–00	12 – 7
5VL–E5598–00	4 – 13
47V–E5618–00	11 – 11
5VL–E5620–01	11 – 10
4FP–E5641–00	11 – 2
5VL–E5651–00	11 – 7

CODIGO Nº PART NO.	REF. Nº
5VL–E5660–01	11 – 1
4FP–E5666–00	11 – 6
5VL–E6111–00	13 – 1
5VL–E6150–00	13 – 6
5VL–E6154–00	13 – 7
5VL–E6164–10	13 – 17
5VL–E6300–10	13 – 5
5VL–E6321–10	13 – 9
5VL–E6324–00	13 – 10
5VL–E6333–10	13 – 12
5VL–E6337–00	13 – 13
5VL–E6351–00	13 – 11
5VL–E6357–01	13 – 21
5VL–E6371–10	13 – 8
5VL–E6381–02	13 – 22
5VL–E7121–00	14 – 3
5VL–E7131–00	14 – 4
5VL–E7141–00	14 – 5
5VL–E7151–00	14 – 2
5VL–E7211–00	14 – 20
5VL–E7221–00	14 – 15
5VL–E7231–00	14 – 16
5VL–E7241–00	14 – 19
5VL–E7251–00	14 – 14
5VL–E7411–00	14 – 1
5VL–E7421–00	14 – 12
3D9–E7456–01	14 – 28
5VL–E7471–00	14 – 10
5VL–E8101–02	16 – 7
5VL–E8110–01	16 – 9
1KL–E8113–00	16 – 10
5VL–E8140–00	16 – 1
4FP–E8177–00	16 – 3
2D0–E8185–00	15 – 2
5VL–E8337–00	16 – 2
5VL–E8511–00	15 – 5
5VL–E8512–00	15 – 6
5VL–E8513–00	15 – 7
5VL–E8531–00	15 – 8
5VL–E8535–00	15 – 9
1NC–F1110–00	17 – 1
42D–F1316–00	17 – 2
42D–F1317–00	17 – 7
42D–F1318–00	17 – 8
18C–F137U–00	23 – 28
18C–F137V–00	23 – 34
18C–F1513–01	18 – 3
5VL–F1518–01	18 – 2

CODIGO Nº PART NO.	REF. Nº
18C–F1611–00	18 – 6
18C–F173E–00	19 – 3
	19 – 5
18C–F173E–10	19 – 3
	19 – 5
5VL–F1746–00	19 – 11
5VL–F1778–00	19 – 7
18C–F177G–00	19 – 10
5VL–F1780–01	38 – 15
5VL–F2110–00	20 – 1
5VL–F2123–00	20 – 3
5VL–F2127–00	20 – 6
5VL–F2128–01	20 – 4
5VL–F2141–01	20 – 7
5VL–F2151–10	20 – 10
5VL–F2210–01	20 – 13
5VL–F2311–00	20 – 11
5VL–F3102–B0	22 – 1
5VL–F3103–B0	22 – 18
5VL–F3106–30	22 – 2
5VL–F3107–40	22 – 19
5HH–F3110–22	22 – 6
	22 – 23
5VL–F3111–20	22 – 15
	22 – 32
5HH–F3118–10	22 – 13
	22 – 30
5VL–F3141–40	22 – 11
	22 – 28
4GU–F3144–00	22 – 5
	22 – 22
4GU–F3145–00	22 – 3
	22 – 20
5AP–F3147–00	22 – 14
	22 – 31
5AP–F3153–00	22 – 4
	22 – 21
5VL–F3154–00	22 – 16
	22 – 33
5VL–F3170–01	22 – 7
	22 – 24
4GU–F3173–01	22 – 8
	22 – 25
3D9–F3174–10	21 – 15
4FP–F317J–00	21 – 17
5VL–F331X–01	22 – 35
5VL–F3346–01	22 – 37
42D–F334G–00	21 – 21

CODIGO Nº PART NO.	REF. Nº
5LK–F3356–01	22 – 10
	22 – 27
18C–F3389–00	21 – 18
4FP–F3395–10	21 – 20
4FP–F3411–00	21 – 2
4FP–F3411–10	22 – 36
1KL–F3412–00	21 – 1
4FP–F3412–00	21 – 3
4GU–F3416–00	21 – 5
42D–F3418–00	21 – 7
5VL–F341E–00	21 – 4
5AP–F3427–00	22 – 12
	22 – 29
5VL–F3435–00–33	21 – 9
5VL–F3441–00	21 – 13
4TU–F3479–00	22 – 9
	22 – 26
2B9–F415B–00	23 – 6
12B–F415J–00	23 – 44
4FP–F4161–00	23 – 7
5VL–F4162–00	23 – 9
5VL–F4163–00	23 – 8
18C–F4168–00	23 – 2
18C–F4168–10	23 – 32
18C–F4216–00	23 – 37
18C–F4217–00	23 – 45
18C–F4241–00	23 – 4
18C–F4244–10	23 – 4
18C–F4244–20	23 – 4
18C–F4245–00	23 – 5
18C–F4245–10	23 – 5
18C–F4245–20	23 – 5
18C–F4256–00	23 – 27
18C–F4256–10	23 – 27
18C–F4255–20	23 – 27
18C–F4256–00	23 – 33
18C–F4256–10	23 – 33
18C–F4256–20	23 – 33
4P2–F431K–00	23 – 22
5VL–F4500–00	23 – 12
5VL–F4512–00	23 – 15
5VL–F4515–00	23 – 17
5VL–F4523–00	23 – 16
5VL–F4524–01	23 – 18
5VL–F4534–00	23 – 13
5VL–F4610–02	38 – 14
18C–F471K–00–P0	24 – 4
18C–F471K–00–P1	24 – 4

CODIGO Nº PART NO.	REF. Nº
18C–F471K–00–P2	24 – 4
18C–F472K–00–P0	24 – 5
18C–F472K–00–P1	24 – 5
18C–F472K–00–P2	24 – 5
18C–F4730–01	24 – 1
4TU–F4741–00	8 – 2
	24 – 2
18C–F474K–01	24 – 14
18C–F474L–01	24 – 15
18C–F4773–00	24 – 11
4GU–F5118–00	25 – 11
4GU–F511X–01	25 – 9
1PX–F5168–00–33	25 – 1
5VL–F5181–11	25 – 7
4GU–F5190–11	25 – 8
5VL–F5321–01–33	27 – 8
1PX–F5338–00–33	27 – 1
4GU–F533A–01	27 – 16
4GU–F5351–02	27 – 12
5VL–F5355–01	27 – 13
1KL–F5364–00	27 – 7
5VL–F5366–00	27 – 17
5VL–F5371–00	27 – 28
42D–F5377–00	27 – 36
5VL–F5381–01	27 – 33
42D–F5386–00	27 – 35
42D–F5387–00	27 – 20
5VL–F5388–01	27 – 37
5VL–F53C0–00	27 – 40
5LK–F5412–01	27 – 23
5VL–F5445–01	27 – 21
3D9–F580U–01	26 – 3
3D9–F582U–10	26 – 1
4KL–F5852–00	29 – 4
4KL–F5854–00	29 – 3
3D9–F5865–01	29 – 10
5VL–F5867–00	29 – 9
3D9–F586F–01	29 – 8
5VL–F5872–11	29 – 11
5VL–F5875–01	29 – 16
5VL–F5876–00	29 – 17
5VL–F5886–00	29 – 15
5VL–F5887–00	29 – 14
3D9–F589F–01	29 – 7
4KL–F589H–01	29 – 5
4S5–F5917–00	26 – 12
4S5–F5919–00	26 – 11
4S5–F5921–01	26 – 8

www.seijilube.com

INDICE NUMERICO
NUMERICAL INDEX

CODIGO Nº PART NO.	REF. Nº
4S5–F5924–01	26 – 13
4S5–F5925–00	26 – 14
4S5–F5937–00	26 – 9
4S5–F5939–00	26 – 10
18C–F6111–00	28 – 1
2D0–F6240–00	28 – 2
5VL–F6241–00	28 – 3
3D9–F6280–02	28 – 9
3D9–F6290–02	28 – 10
18C–F6311–11	28 – 4
18C–F6312–11	28 – 6
5VL–F6335–03	28 – 7
5VL–F6372–01	28 – 8
42D–F7111–00	30 – 1
5VL–F7112–11	30 – 2
5VL–F7115–01	30 – 3
3D9–F7211–00	30 – 5
5VL–F7231–01	30 – 7
42D–F7311–00	30 – 20
1P6–F7313–01	30 – 25
42D–F7411–00	30 – 13
5VL–F7413–00	30 – 17
5VL–F7414–00	30 – 41
5VL–F7430–01	30 – 32
5VL–F7433–00	30 – 33
42D–F743H–00	30 – 14
5VL–F7440–01	30 – 35
5VL–F7444–00	30 – 36
5VL–F7445–01	30 – 34
	30 – 37
42D–F7452–00	30 – 27
42D–F7462–00	30 – 28
5VL–F8100–01	17 – 16
5VL–F811G–01	17 – 17
2D0–H1410–01	31 – 2
2D0–H1450–11	31 – 1
4FP–H1801–00	32 – 2
4FP–H1828–01	32 – 5
4FP–H182L–00	32 – 4
5VL–H183G–01	32 – 7
5VL–H1890–00	32 – 1
5VL–H1940–01	38 – 8
2D0–H1960–00	38 – 6
5VL–H1980–10	38 – 20
1NC–H2021–00	38 – 12
5VL–H2100–00	38 – 1
5VL–H2109–00	30 – 16
5VL–H2115–00	38 – 4

CODIGO Nº PART NO.	REF. Nº
5VL–H2116–00	38 – 5
5VL–H2131–01	38 – 3
4FP–H2151–00	38 – 9
5VL–H2310–01	39 – 1
4FP–H2370–01	39 – 3
1NC–H2501–00	38 – 13
3S9–H2530–01	38 – 18
5VL–H2540–01	39 – 4
1NC–H2590–00	38 – 19
4FP–H2911–00	37 – 10
5VL–H2917–11	37 – 15
3D9–H3310–10	33 – 1
3D9–H3311–10	33 – 2
	33 – 6
	33 – 10
	33 – 14
3D9–H3318–10	33 – 17
3D9–H3320–10	33 – 5
3D9–H3330–10	33 – 9
3D9–H3333–10	33 – 4
	33 – 8
	33 – 12
	33 – 16
3D9–H333A–00	33 – 3
	33 – 15
3D9–H3340–10	33 – 13
3D9–H334A–00	33 – 7
	33 – 11
18C–H3350–01	39 – 8
18C–H3371–10	39 – 9
1PX–H3500–00	34 – 1
1PX–H3509–00	34 – 8
1PX–H350A–00	34 – 2
5VL–H350E–00	34 – 4
4FP–H3517–10	34 – 9
4GU–H3517–10	34 – 10
18C–H3524–00	34 – 6
18C–H353H–00	34 – 3
5VL–H353S–00	34 – 12
5VL–H3543–00	34 – 5
5VL–H354P–00	34 – 7
5VL–H3550–12	34 – 14
5VL–H357H–00	34 – 11
5VL–H3912–00	37 – 11
5VL–H3922–21	29 – 6
4TU–H3936–00	37 – 17
5VL–H3936–00	38 – 22
5VL–H3973–01	37 – 4

CODIGO Nº PART NO.	REF. Nº
42D–H3976–00	37 – 7
5VL–H3980–01	37 – 3
5VL–H4145–00	35 – 10
5VL–H4159–10	35 – 7
5VL–H4163–00	35 – 11
5VL–H4164–00	35 – 12
5VL–H4300–23	35 – 1
5VL–H4310–22	35 – 4
5VL–H4312–10	35 – 6
5VL–H4314–20	35 – 2
5VL–H4315–21	35 – 5
5VL–H4330–22	35 – 9
5VL–H4347–10	35 – 3
5VL–H4526–00	35 – 8
18C–H4700–01	36 – 1
18C–H4704–00	36 – 4
3D9–H4714–10	36 – 3
18C–H4721–01	36 – 2
3D9–H4724–10	36 – 5
5VL–H5110–01	22 – 17
	22 – 34
4FP–H5130–21	39 – 11
5VL–H5540–11	39 – 6
1PX–H5546–00	39 – 7
18C–H5752–01	38 – 24
4FP–H5753–00	38 – 25
3D9–W0041–02	29 – 2
4S5–W0045–00	26 – 6
4S5–W0047–00	26 – 5
4S5–W0048–01	26 – 7
4S5–W0057–00	26 – 4
2D0–W1140–00	2 – 1
2D0–W1141–00	2 – 2
5VL–W1161–00	2 – 14
18C–W137W–00–P0	23 – 24
18C–W137W–00–P1	23 – 24
18C–W137W–00–P2	23 – 24
18C–W137X–01–P0	23 – 29
18C–W137X–01–P1	23 – 29
18C–W137X–01–P2	23 – 29
4P2–W1415–00	7 – 10
4P2–W149A–00	7 – 11
4P2–W149J–00	7 – 3
4P2–W149K–00	7 – 2
5VL–W1510–11	9 – 1
1PX–W2411–00–P0	23 – 1
1PX–W2411–00–P1	23 – 1
1PX–W2411–00–P2	23 – 1

CODIGO Nº PART NO.	REF. Nº
3D9–W2533–00	27 – 9
2B9–W583T–02	29 – 1
5VL–Y1153–00	2 – 7
5VL–Y1215–00	3 – 9
4P2–Y1441–01	6 – 5
5VL–Y1635–10	13 – 14
5VL–Y1854–01	15 – 1
18C–Y2151–00–P0	18 – 1
18C–Y2151–00–P1	18 – 1
18C–Y2151–00–P2	18 – 1
18C–Y2171–00–P0	19 – 1
18C–Y2171–01–P0	19 – 1
18C–Y2172–06–P0	19 – 4
18C–Y2172–07–P0	19 – 4
18C–Y2475–00–P0	24 – 6
18C–Y2475–00–P1	24 – 6
18C–Y2475–00–P2	24 – 6
90101–06848	27 – 14
90101–08820	4 – 9
90101–10818	30 – 23
90105–08724	1 – 13
90105–08873	17 – 12
90105–08874	17 – 4
90105–088E4	17 – 9
90105–088E5	17 – 10
90105–088E6	17 – 13
90105–10831	26 – 15
90109–06850	37 – 12
90109–08847	27 – 29
90109–08848	27 – 30
90109–08864	27 – 22
90111–05803	23 – 42
90111–08805	26 – 2
90119–05022	38 – 26
90119–06811	19 – 12
90119–06869	6 – 17
	18 – 8
	19 – 9
	24 – 3
	24 – 9
	30 – 15
90123–08813	37 – 1
90149–06833	39 – 10
90151–06818	15 – 4
90153–06803	1 – 5
90153–08804	27 – 39
90155–06800	5 – 7
90157–03800	23 – 19

CODIGO Nº PART NO.	REF. Nº
90159–06820	23 – 20
90159–06830	20 – 12
90170–12060	13 – 19
90176–10810	20 – 15
90176–22801	21 – 11
90179–05523	23 – 43
90179–06826	30 – 12
90179–08639	27 – 24
90179–08830	17 – 6
	17 – 11
	17 – 14
90179–08862	37 – 2
90179–10807	17 – 5
90179–12613	11 – 12
	13 – 4
90179–14563	2 – 18
90179–23810	21 – 6
90183–05807	18 – 7
	36 – 8
90185–10613	30 – 24
90201–06602	21 – 23
	39 – 13
90201–08603	8 – 6
90201–05604	8 – 7
90201–069C2	38 – 11
	38 – 17
90201–07641	5 – 4
90201–08826	4 – 8
90201–08830	35 – 14
90201–08840	17 – 15
	30 – 19
90201–089C3	1 – 14
90201–089P2	23 – 10
90201–10831	30 – 26
90201–108C7	20 – 14
90201–108J9	29 – 13
90201–123H1	2 – 17
	13 – 3
90201–12819	20 – 9
90201–152H7	11 – 8
90201–15700	14 – 21
90201–20266	14 – 6
	14 – 17
90201–20272	14 – 23
90201–208D5	11 – 4
90201–22804	21 – 12
90201–228F6	19 – 8
90201–258D7	12 – 6

CODIGO Nº PART NO.	REF. Nº
90202–09800	23 – 40
90202–26142	21 – 8
90208–07052	5 – 5
90215–12211	13 – 18
90249–06800	30 – 38
90249–12808	30 – 11
90280–03017	2 – 16
90282–05001	13 – 2
90331–07031	14 – 13
90338–16148	24 – 12
90340–12097	5 – 8
90340–14810	10 – 6
90340–32812	10 – 8
90386–18099	20 – 2
90387–06879	23 – 39
90387–07818	18 – 4
90387–15809	27 – 2
90387–158K1	25 – 10
90387–167L5	4 – 4
90401–10811	29 – 12
90430–05800	23 – 21
90430–06817	1 – 6
	4 – 18
90430–10819	39 – 5
90430–12227	5 – 9
90445–08830	38 – 2
90445–08838	18 – 9
90445–21814	30 – 22
90450–44804	6 – 4
90450–51802	6 – 18
90462–16801	9 – 6
90464–35820	38 – 21
	38 – 23
90464–70801	37 – 16
90467–09854	23 – 23
90467–12828	9 – 5
90468–26813	11 – 3
90480–01868	23 – 41
	24 – 10
	36 – 6
90480–13810	36 – 7
90480–13837	19 – 6
90480–15878	23 – 25
	23 – 30
90480–24186	19 – 2
90501–10806	30 – 10
90506–12801	27 – 10
90506–15802	27 – 11

www.seikusubaru.com

INDICE NUMERICO
NUMERICAL INDEX

CODIGO Nº PART NO.	REF. Nº
90506–29800	30 – 21
90506–32800	30 – 4
90508–16800	13 – 23
90508–26836	11 – 5
90508–32801	16 – 5
90508–40801	30 – 6
90560–15293	25 – 2
91312–05010	14 – 29
91312–06012	4 – 6
91312–06014	31 – 4
91312–06020	8 – 13
	38 – 16
91312–06025	6 – 3
	31 – 3
91312–06090	1 – 18
91312–08016	12 – 8
91402–20012	27 – 32
	30 – 8
92902–06200	13 – 15
	30 – 9
	30 – 39
92902–08200	30 – 31
92990–06200	8 – 11
93101–10800	10 – 21
93101–12812	16 – 4
93102–12802	13 – 24
93102–20854	14 – 25
93102–20857	25 – 4
93104–22802	27 – 5
93106–26804	27 – 19
93109–18802	20 – 5
93109–20806	11 – 13
93210–11800	2 – 9
93210–14899	10 – 7
93210–19809	10 – 20
93210–30611	6 – 2
93210–328A4	10 – 9
93210–42807	27 – 6
93210–44889	1 – 12
93210–55669	32 – 3
93210–57897	1 – 21
93210–71801	1 – 9
93306–002YU	4 – 3
93306–003X6	4 – 2
93306–004YL	27 – 18
93306–201Y8	14 – 8
93306–202XN	2 – 15
93306–202XP	14 – 26

CODIGO Nº PART NO.	REF. Nº
93306–202Y4	25 – 3
	27 – 3
93306–203YT	14 – 9
93306–204YD	14 – 24
93306–205XJ	2 – 10
93306–252X5	27 – 4
93310–629Y3	2 – 4
93410–20809	14 – 7
	14 – 18
93440–10109	1 – 4
93450–16812	2 – 13
93503–16824	13 – 20
93604–10837	15 – 3
93608–30839	16 – 8
93822–14813	14 – 27
93900–00826	27 – 27
94109–18816	27 – 25
94127–18848	25 – 5
94227–18808	25 – 6
	27 – 26
94568–C1088	4 – 10
94668–83001	27 – 41
94700–00869	1 – 15
95022–06016	4 – 17
	29 – 18
	34 – 13
	39 – 2
95022–06020	1 – 10
95022–06025	29 – 19
	32 – 8
95022–06030	9 – 7
95022–06035	10 – 4
	10 – 17
95022–06045	9 – 8
	10 – 18
95022–06050	10 – 5
95022–06055	9 – 9
95022–08035	21 – 14
95022–08040	21 – 10
95023–08030	35 – 13
95302–06600	13 – 16
	27 – 15
	38 – 10
95302–08800	35 – 15
95312–08600	27 – 38
95602–05100	39 – 12
95602–06100	37 – 13
95602–12200	20 – 8

CODIGO Nº PART NO.	REF. Nº
95602–14200	25 – 12
	27 – 34
95702–08500	27 – 31
95802–06012	23 – 36
95802–06020	4 – 14
	23 – 38
	38 – 7
95812–08020	8 – 14
	24 – 13
	30 – 18
	30 – 29
95812–08025	30 – 30
95812–10080	17 – 3
95822–06012	21 – 19
95822–06016	21 – 16
95822–06020	18 – 5
97002–05012	21 – 22
97002–08016	23 – 11
97022–06020	16 – 11
97590–06522	37 – 14
97602–06220	6 – 13
97702–50016	23 – 35
9770N–50012	24 – 8
97801–04010	7 – 13
97880–03008	23 – 14
98502–05010	28 – 5
98507–05025	37 – 6
98507–05030	37 – 8
98507–05043	37 – 5
98507–05050	37 – 9
98512–06010	10 – 11
98512–06012	12 – 4
	14 – 11
98902–05008	32 – 6
98902–06016	10 – 13
98980–06012	8 – 5
98980–06014	8 – 8
	8 – 10
99002–05600	5 – 3
	30 – 40
99002–10600	16 – 6
99009–15400	11 – 9
	14 – 22
99009–20500	13 – 25
99234–00080	24 – 7
99236–00100	23 – 26
	23 – 31
99530–10114	1 – 17

CODIGO Nº PART NO.	REF. Nº
99530–10114	9 – 2
	9 – 10
	10 – 3
	10 – 16

CODIGO Nº PART NO.	REF. Nº

CODIGO Nº PART NO.	REF. Nº

www.seacubemoto.com