SEACUBE
ONE-STOP PARTS SOLUTION

YAMAHA

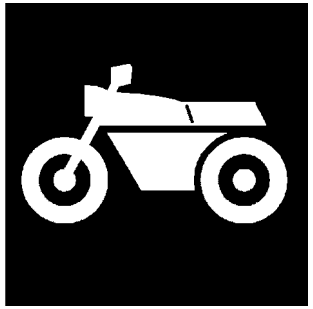

PARTS CATALOGUE
CATALOGO DE REPUESTOS

www.seacubemoto.com

YB125ZR (BH72)

YAMAHA
GENUINE
Parts & Accessories

1SBH7-200S1

( )

SEACUBE
ONE-STOP PARTS SOLUTION

www.seacubemoto.com

YB125ZR
CATALOGO DE REPUESTOS
©2016 por Yamaha Motor Co., Ltd.
1ª edición, septiembre 2016
Todos los derechos reservados.
Toda reproducción o uso no autorizado
sin el consentimiento escrito de
Yamaha Motor Co., Ltd.
quedan expresamente prohibidos
Impreso en Japón.

YB125ZR
PARTS CATALOGUE
©2016 by Yamaha Motor Co., Ltd.
1st edition, September 2016
All rights reserved.
Any reprinting or unauthorized use
without the written permission of
Yamaha Motor Co., Ltd.
is expressly prohibited.
Printed in Japan.

SEACUBE
ONE-STOP PARTS SOLUTION

PROLOGO

e repuestos corresponde a las piezas para el o los modelos que figuran en la página de portada. Al formular el pedido de repuestos, se ruega citar este catálogo y especificar correctamente el número y el nombre de las piezas.

1. Las modificaciones y agregados que se hayan realizado después de la edición de este Catálogo de Repuestos, serán anunciados en las Informaciones de Recambios.
   Es recomendable que se hagan las correcciones necesarias en el Catálogo de Repuestos de acuerdo con las Informaciones de Recambios.

2. Abreviaciones
   En este. Catálogo de Repuestos se emplean las siguientes abreviaciones.
   "UR" Usar el número de partes especificado
   "UN" Usar la cantidad necesaria
   "AP" Piezas sustitutivas
   "LM" Fabricación local (Hay que pedir los repuestos en las cercanías)
   "F#" Nº de bastidor (Nº aplicable a la máquina)
   "O/S" Sobredimensionado

www.seacubemoto.com

3. La cantidad de componentes para el montaje
   - Los componentes, suministrados como conjunto, se describen con un punto (.) que precede al nombre del parte como se indica a continuación.
   - La numeración que aparece a la derecha de cada descripción indica la cantidad de partes por cada unidad de conjunto.

CODIGO Nº	DESCRIPCION	CANT.	OBSERVACIONES
2F5–83310–60	ENSAMBLAJE DE LA LUZ	2	
115–83311–60	.BOMBILLA (6V–18W)	1	

4. Los colores de los componentes se indican como sigue en la columna de "OBSERVACIONES".

CODIGO Nº	DESCRIPCION	CANT.	OBSERVACIONES
2N4–24110–00–X5	COMP. DEL TANQUE	2	MXR
3J1–24240–10	.GRAFICO, DEL TANQUE	1	PARA MXR

5. Debe tenerse en cuenta que las ilustraciones sirven como guia para la búsqueda de los números de partes y no deben usarse para el montaje. Durante el montaje, se recomienda usar el manual de taller correspondiente.

6. EL asterisco (*) antes del número de referencia indica los elementos modificados después de la primera edición.

SEACUBE
ONE-STOP PARTS SOLUTION

FOREWORD

ogue is related to the parts for the model(s) on the cover page. When you are ordering replacement parts, please refer to this Parts Catalogue and quote both part numbers and part names correctly.

1. Modifications or additions which have been made after the issue of the Parts Catalogue will be announced in the Parts News.
   It is advisable that you make the necessary corrections to the Parts Catalogue according to the Parts News.

2. Abbreviations
   The following abbreviations are used in this Parts Catalogue.
   "UR" Use specified parts number.
   "UN" Use as many as needed.
   "AP" Alternate Parts
   "LM" Locally Made (Parts need to be ordered locally)
   "F#" Frame No. (Applicable machine No.)
   "O/S" Over Size

www.seacubemoto.com

3. The number of components for assembly
   - Parts, which are to be supplied in an assembly, are listed with a dot (.) in front of the part name as shown below.
   - The numeral appearing to the right of each component part indicates the quantity of parts for each assembly unit.

PART NO.	DESCRIPTION	Q'TY	REMARKS
2F5–83310–60	FRONT FLASHER LIGHT ASSY	2	
115–83311–60	.BULB (6V–18W)	1	

4. Applicable colours of graphics are represented in the "REMARKS" as shown below.

PART NO.	DESCRIPTION	Q'TY	REMARKS
2N4–24110–00–X5	FUEL TANK COMP.	2	MXR
3J1–24240–10	.GRAPHIC, FUEL TANK	1	FOR MXR

5. Note that the illustrations for reference in finding parts numbers are not to be used for assembling. When assembling, please use the applicable service manual.

6. The asterisk (*) before a reference number indicates modified items after the first edition.

SEACUBE
ONE-STOP PARTS SOLUTION

de serie

Nº de Serie del bastidor

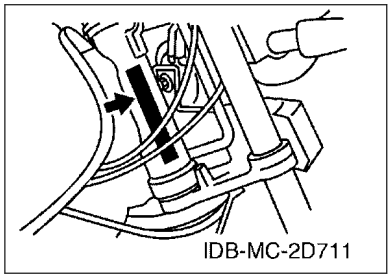

Nº de Serie del motor

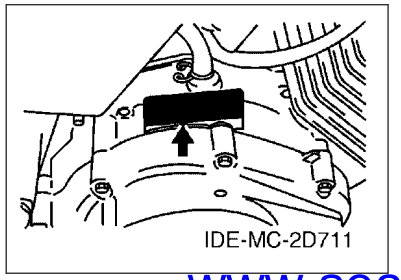

www.seacubemoto.com

8. Códigos de color aplicables (El símbolo (*) muestra el color de modelo.)

Abreviatura	Nombre de color	Código de color
BWC1(*)	BLUISH WHITE COCKTAIL 1	0390
DBNM8	DARK BLUISH GRAY METALLIC 8	0919
DOMC(*)	DEEP ORANGE METALLIC C	1499
RM7(*)	RED METALLIC 7	1218
SL	SILVER	0035
SMX(*)	BLACK METALLIC X	0903
YB	YAMAHA BLACK	0033

9. Nº de serie inicial aplicable

Nº de Serie del bastidor

Nº de serie	Nombre de la columna de cantidades	Código de Modelo

Nº de Serie del motor

Nº de serie	Nombre de la columna de cantidades	Código de Modelo

SEACUBE
ONE-STOP PARTS SOLUTION

7. Serial No.

Frame Serial No.

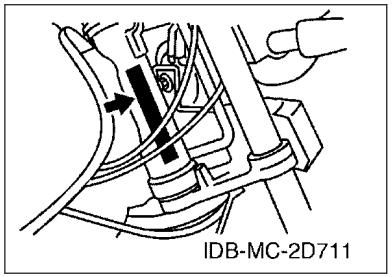

Engine Serial No.

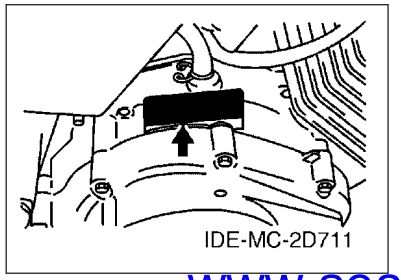

www.seacubemoto.com

8. Applicable Colour Code (The (*) mark shows Model colour.)

Abbreviation	Colour Name	Colour Code
BWC1(*)	BLUISH WHITE COCKTAIL 1	0390
DBNM8	DARK BLUISH GRAY METALLIC 8	0919
DOMC(*)	DEEP ORANGE METALLIC C	1499
RM7(*)	RED METALLIC 7	1218
SL	SILVER	0035
SMX(*)	BLACK METALLIC X	0903
YB	YAMAHA BLACK	0033

9. Applicable Starting Serial No.

Frame Serial No.

Serial No.	Name Of Q'ty Column	Model Code

Engine Serial No.

Serial No.	Name Of Q'ty Column	Model Code

SEACUBE
ONE-STOP PARTS SOLUTION

CONTENIDO

MOTOR

CILINDRO....1
CIGUENAL & PISTON....2
VALVULA....3
ARBOL DE LEVAS & CADENA....4
BOMBA DE ACEITE....5
ADMISION....6
CARBURADOR....7
DESCARGA....9
CARTER....10
CUBIERTA DE CARTER 1....11
EMBRAGUE DEL ARRANQUE....12
EMBRAGUE....13
TRANSMISION....14
LEVA DE CAMBIO & HORQUILLA....16
EJE DE CAMBIO & PEDAL....17

SHASIS

CUADRO....18
GUARDABARRO....19
CUBIERTA LATERAL....20
BRAZO TRASERO & SUSPENSION....21
DIRECCION....22
HORQUILLA DELANTERA....23
DEPOSITO DE COMBUSTIBLE....25
ASIENTO....29
RUEDA DELANTERA....30
CALIBRE FRENO DELANTERA....31
RUEDA TRASERA....32
MANILLAR & CABLE....34
CILINDRO MAESTRO DELANTERO....35
SOPORTE & APOYAPIE....36
BOVEDA 1....38
GENERADOR....40
MOTOR DE ARRANQUE....41
LUZ DE DESTELLADOR....42
MEDIDOR....43
FARO DELANTERO....44
LUZ DE COLA....45
INTERRUPTOR DE MANILLAR&PALANC....46
EQUIPO ELECTRICO 1....47
EQUIPO ELECTRICO 2....48

INDICE

INDICE NUMERICO....49

www.seacubemoto.com

SEACUBE
ONE-STOP PARTS SOLUTION

CONTENTS

ENGINE

CYLINDER....1
CRANKSHAFT & PISTON....2
VALVE....3
CAMSHAFT & CHAIN....4
OIL PUMP....5
INTAKE....6
CARBURETOR....7
EXHAUST....9
CRANKCASE....10
CRANKCASE COVER 1....11
STARTER CLUTCH....12
CLUTCH....13
TRANSMISSION....14
SHIFT CAM & FORK....16
SHIFT SHAFT....17

CHASSIS

FRAME....18
FENDER....19
SIDE COVER....20
REAR ARM & SUSPENSION....21
STEERING....22
FRONT FORK....23
FUEL TANK....25
SEAT....29
FRONT WHEEL....30
FRONT BRAKE CALIPER....31
REAR WHEEL....32
STEERING HANDLE & CABLE....34
FRONT MASTER CYLINDER....35
STAND & FOOTREST....36
COWLING 1....38
GENERATOR....40
STARTING MOTOR....41
FLASHER LIGHT....42
METER....43
HEADLIGHT....44
TAILLIGHT....45
HANDLE SWITCH & LEVER....46
ELECTRICAL 1....47
ELECTRICAL 2....48

INDEX

NUMERICAL INDEX....49

www.seacubemoto.com

SEACUBE
ONE-STOP PARTS SOLUTION

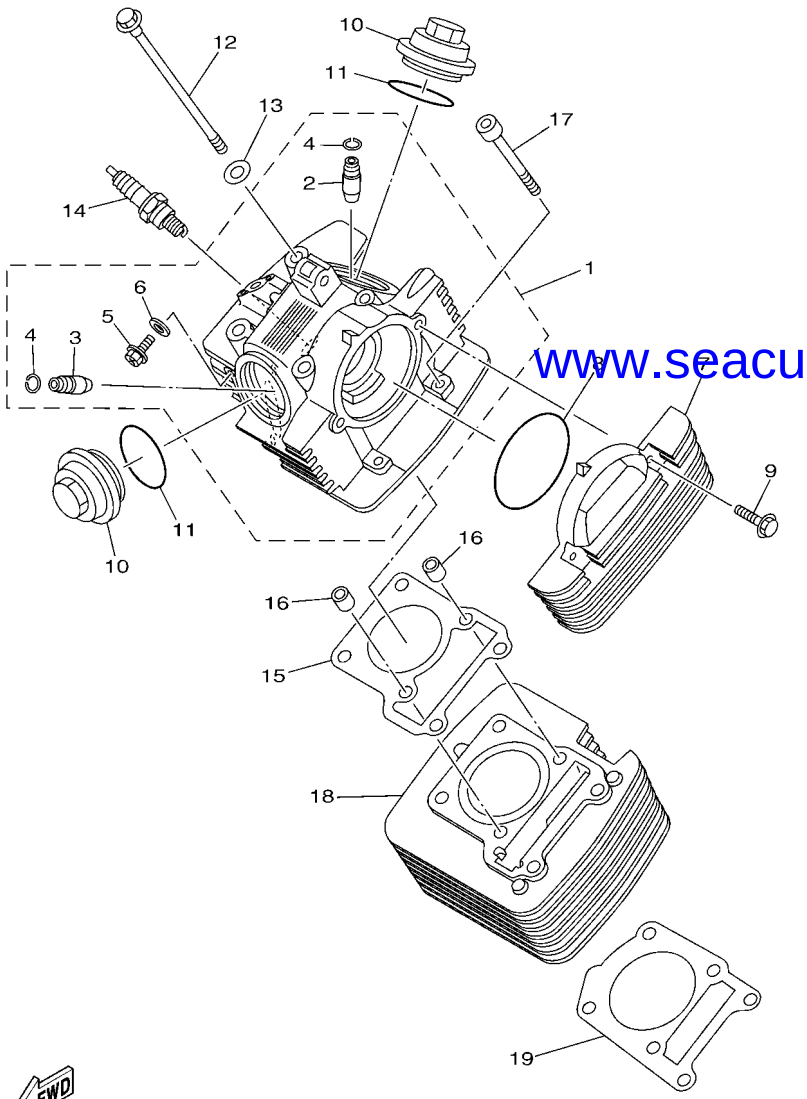

1SF1415-L010

FIG. 1 CILINDRO — CYLINDER

REF. Nº	CODIGO Nº PART NO.	DESCRIPCION DESCRIPTION	BH72					OBSERVACIONES REMARKS
1	5VL–E1111–01	CULATA CILINDRO 1 HEAD, CYLINDER 1	1					
2	2UJ–11133–10	.GUIA DE VALVULA 1 .GUIDE, VALVE 1	1					
3	22F–11134–10	.GUIA DE VALVULA 2 .GUIDE, VALVE 2	1					
4	93440–10109	.SEGURO .CIRCLIP	2					
5	90153–06803	.TORNILLO HEXAGONAL .SCREW, HEXAGON	1					
6	90430–06817	.JUNTA .GASKET	1					
7	5VL–E1185–00	CUBIERTA CULATA CIL.LAT.3 COVER, CYLINDER HEAD SIDE 3	1					
8	93210–71801	ANILLO O O-RING	1					
9	95022–06020	PERNO, DE BRIDA BOLT, FLANGE	2					
10	5VL–E1186–10	CUBIERTA CULATA CIL.LAT.2 COVER, CYLINDER HEAD SIDE 2	2					
11	93210–44812	ANILLO O O-RING	2					
12	90105–08724	TORNILLO BOLT, FLANGE	4					
13	90201–088C3	ARANDELA PLANA WASHER, PLATE	4					
14	94700–00869	BUJIA (NGK CR6HSA) PLUG SPARK (NGK CR6HSA)	1					
15	5VL–E1181–00	JUNTA, DE CULATA 1 GASKET, CYLINDER HEAD 1	1					
16	99530–10114	PASADOR, DE ESPIGA PIN, DOWEL	2					
17	91312–06090	TORNILLO BOLT	2					
18	5VL–E1310–10	CILINDRO CYLINDER	1					
19	5VL–E1351–10	JUNTA, DE CILINDRO GASKET, CYLINDER	1					

www.seacubemoto.com

SEACUBE
ONE-STOP PARTS SOLUTION

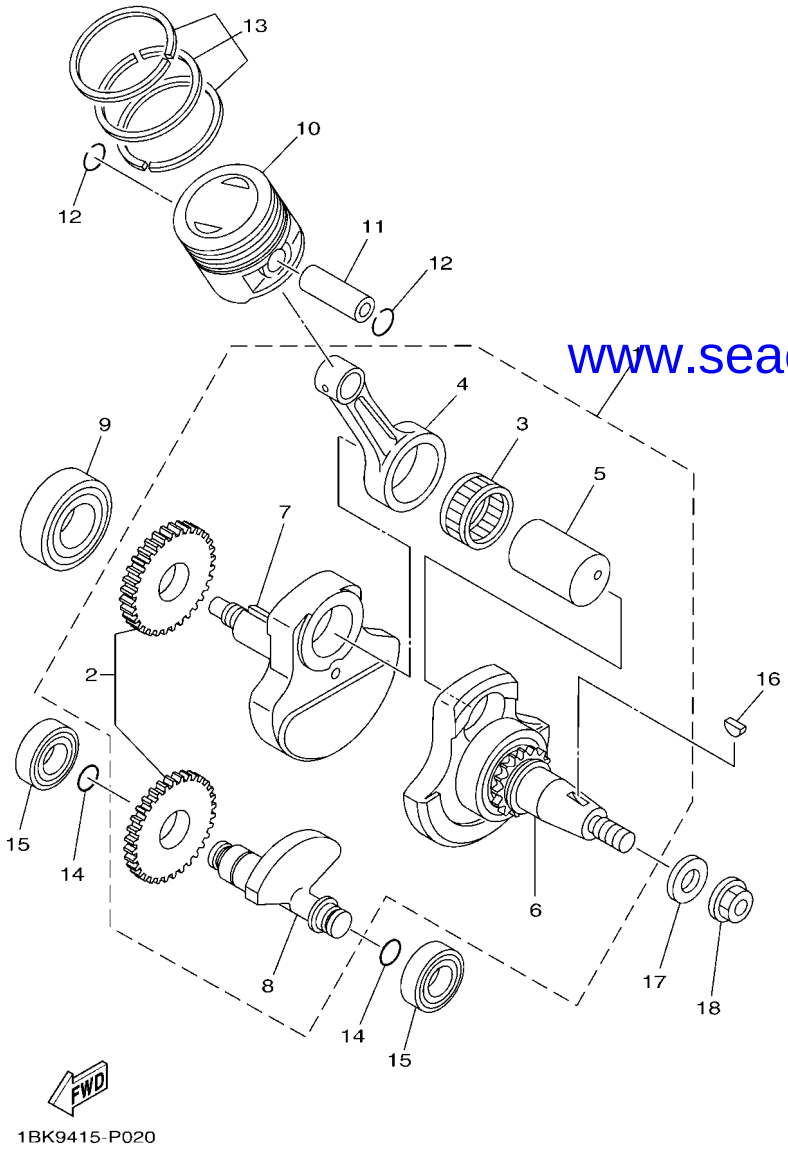

www.seacubemoto.com

FIG. 2 CIGUENAL & PISTON — CRANKSHAFT & PISTON

REF. Nº	CODIGO Nº PART NO.	DESCRIPCION DESCRIPTION	BH72					OBSERVACIONES REMARKS
1	2MP–W1140–02	CIGUENAL COMPLETO CRANKSHAFT ASSY	1					
2	5VL–Y1153–00	.ENGRANAJE TRACCION .GEAR, BALANCE WEIGHT ASSY.	1					
3	93310–629Y3	.COJINETE DE RODILLOS .BEARING	1					
4	2MP–E1651–00	.BIELA .ROD, CONNECTING	1					
5	5VL–E1681–00	.PASADOR MANIVELA 1 .PIN, CRANK 1	1					
6	5VL–W1141–01	.MANIVELA SEMI-ARMADA 1 .CRANK SUB ASSY 1	1					
7	5VL–E1422–00	.MANIVELA 2 .CRANK 2	1					
8	5VL–E1454–00	.PESO 1 .WEIGHT 1	1					
9	93306–205XJ	COJINETE BEARING	1					
10	5VL–E1631–00	PISTON (NORMA) PISTON (STD)	1					
11	5VL–E1633–00	PASADOR, PISTON PIN, PISTON	1					
12	93450–16812	SEGURO CIRCLIP	2					
13	5VL–W1161–00	JUEGO DE AROS (NORMA) PISTON RING SET (STD)	1					
14	93210–11809	ANILLO O O-RING	2					UR UR
	93210–11800	ANILLO O O-RING	2					UR UR
15	93306–202XN	COJINETE BEARING	2					
16	90280–03017	CUNA WOODRUFF KEY, WOODRUFF	1					
17	90201–122H1	ARANDELA PLANA WASHER, PLATE	1					
18	90179–12863	TUERCA NUT	1					

SEACUBE
ONE-STOP PARTS SOLUTION

FIG. 3 VALVULA — VALVE

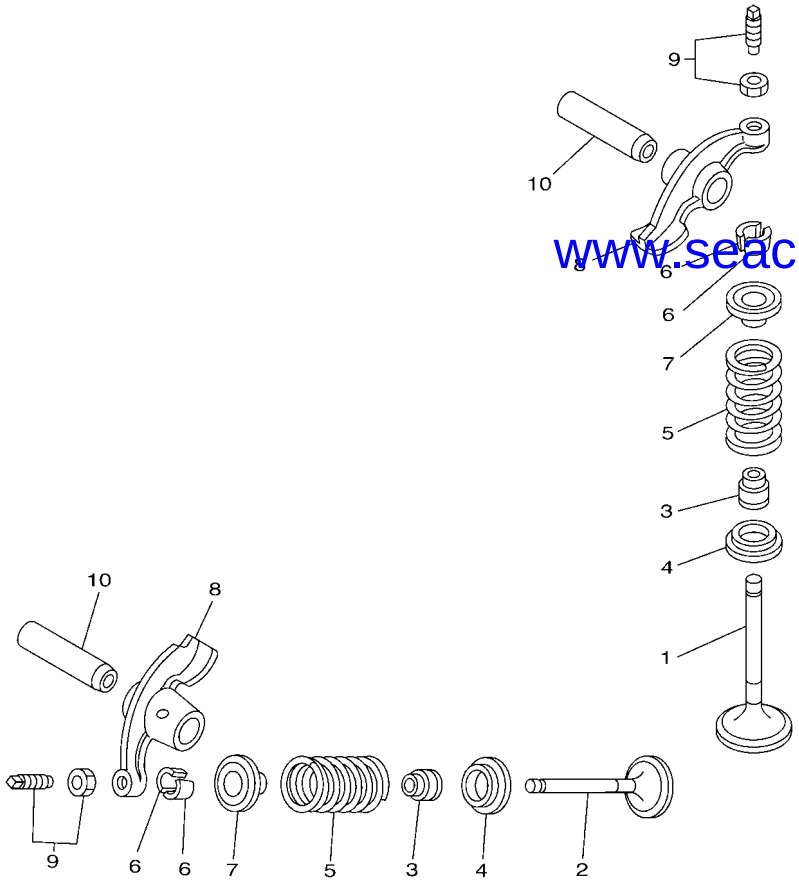

www.seacubemoto.com

REF. Nº	CODIGO Nº PART NO.	DESCRIPCION DESCRIPTION	BH72					OBSERVACIONES REMARKS
1	5VL–E2111–00	VALVULA DE ADMISION VALVE, INTAKE	1					
2	5VL–E2121–00	VALVULA DE ESCAPE VALVE, EXHAUST	1					
3	1BK–E2119–00	SELLO DE ACEITE VALVULA SEAL, VALVE STEM	2					
4	5VL–E2116–01	ASIENTO RESORTE DE VALVULA SEAT, VALVE SPRING	2					
5	5KA–12113–00	RESORTE VALVULA INTERNA SPRING, VALVE INNER	2					
6	5VL–E2118–00	SEGURO DE VALVULA LOCK, VALVE SPRING RETAINER	4					
7	5VL–E2117–01	RETEN RESORTE DE VALVULA RETAINER, VALVE SPRING	2					
8	5VL–E2151–00	BRAZO DE BALANCIN DE VALVULA ARM, VALVE ROCKER	2					
9	5VL–Y1215–00	TORNILLO DE AJUSTE DE VALVULA SCREW, VALVE ADJUSTING	2					
10	5VL–E2156–00	EJE DE BALANCIN SHAFT, ROCKER 2	2					

SEACUBE
ONE-STOP PARTS SOLUTION

FIG. 4 ARBOL DE LEVAS & CADENA — CAMSHAFT & CHAIN

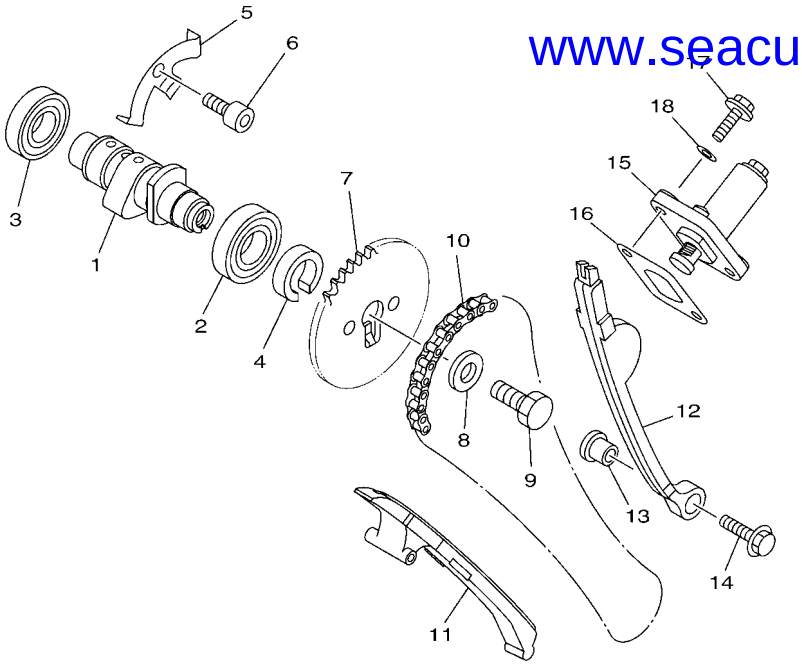

BH71200-R040

www.seacubemoto.com

REF. Nº	CODIGO Nº PART NO.	DESCRIPCION DESCRIPTION	BH72					OBSERVACIONES REMARKS
1	5VL–E2171–00	ARBOL DE LEVAS 1 CAMSHAFT 1	1					
2	93306–003X6	COJINETE BEARING	1					
3	93306–002YU	COJINETE BEARING	1					
4	90387–167L5	ESPACIADOR COLLAR	1					
5	5VL–E111F–00	PLACA PLATE	1					
6	91312–06012	TORNILLO BOLT	1					
7	5VL–E2176–00	CATALINA DE CADENA (34T) SPROCKET, CAM CHAIN (34T)	1					
8	90201–08877	ARANDELA PLANA WASHER, PLATE	1					
9	90101–08820	TORNILLO BOLT	1					
10	94568–C1088	CADENA CHAIN	1					
11	5VL–E2231–00	TOPE DE GUIA 1 GUIDE, STOPPER 1	1					
12	5VL–E2241–00	TOPE DE GUIA 2 GUIDE, STOPPER 2	1					
13	5VL–E5598–00	COLLAR COLLAR	1					
14	95802–06020	TORNILLO DE REBORDE BOLT, FLANGE	1					
15	2MP–E2210–00	TENSOR CADENA DE LEVA TENSIONER ASSY, CAM CHAIN	1					
16	5VL–E2213–10	EMPAQUE DE CAJA TENSOR GASKET, TENSIONER CASE	1					
17	95022–06016	PERNO, DE BRIDA BOLT, FLANGE	2					
18	90430–06817	JUNTA GASKET	2					

SEACUBE
ONE-STOP PARTS SOLUTION

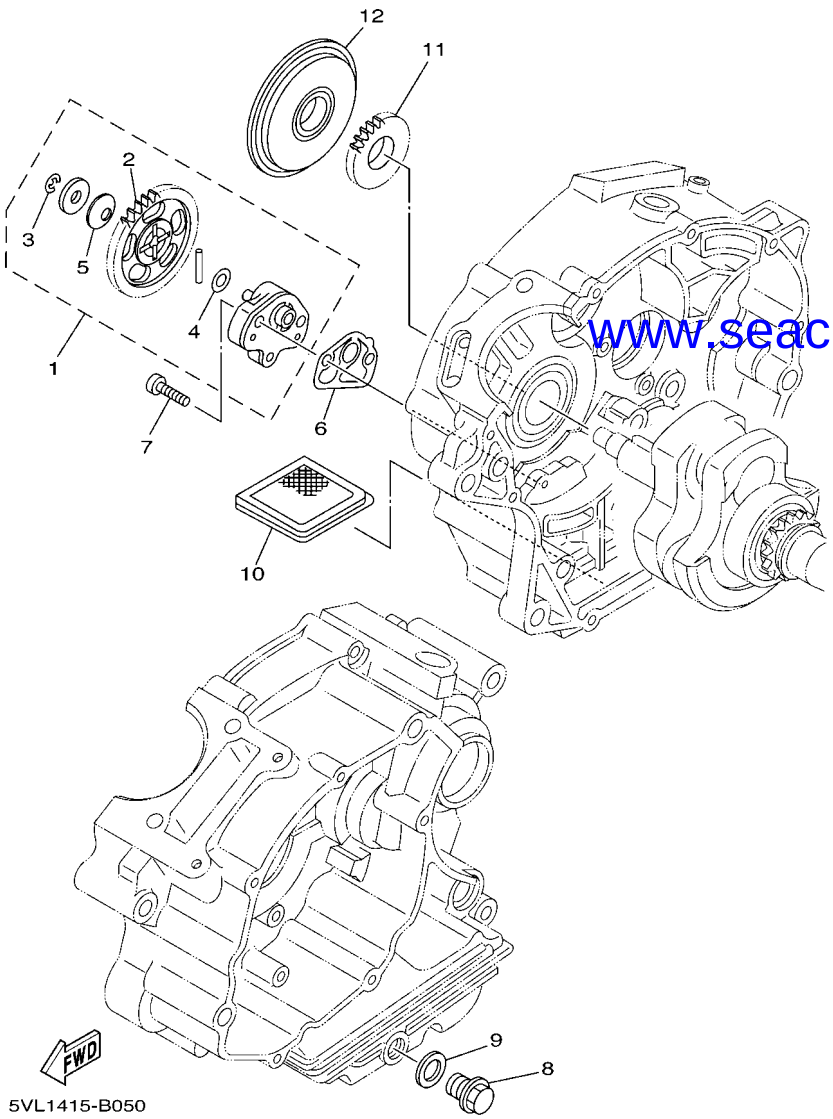

www.seacubemoto.com

FIG. 5 BOMBA DE ACEITE — OIL PUMP

REF. Nº	CODIGO Nº PART NO.	DESCRIPCION DESCRIPTION	BH72					OBSERVACIONES REMARKS
1	5VL–E3300–01	BOMBA DE ACEITE COMPLETA OIL PUMP ASSY	1					
2	5VL–E3325–00	.ENGRANAJE IMPULSOR DE BOMBA 1 .GEAR, PUMP DRIVEN	1					
3	93430–05823	.SEGURO .CIRCLIP	1					
4	90201–07641	.ARANDELA PLANA .WASHER, PLATE	1					
5	90208–07052	.ARANDELA DE RESORTE CONICO .WASHER, CONICAL SPRING	1					
6	5VL–E3329–00	EMPAQUE TAPA DE BOMBA GASKET, PUMP COVER	1					
7	90155–06800	TORNILLO CABEZA PLANA RAN. SCREW, FLAT FILLISTER	2					
8	90340–12097	TORNILLO, DE DRENAJE PLUG, STRAIGHT SCREW	1					
9	90430–12227	JUNTA GASKET	1					
10	4FP–E3411–00	FILTRO DE ACEITE STRAINER, OIL	1					
11	5VL–E3324–00	ENGRANAJE TRACC. DE BOMBA GEAR, PUMP DRIVE	1					
12	5VL–E3451–00	FILTRE ROTATIVO FILTER, ROTARY	1					

SEACUBE
ONE-STOP PARTS SOLUTION

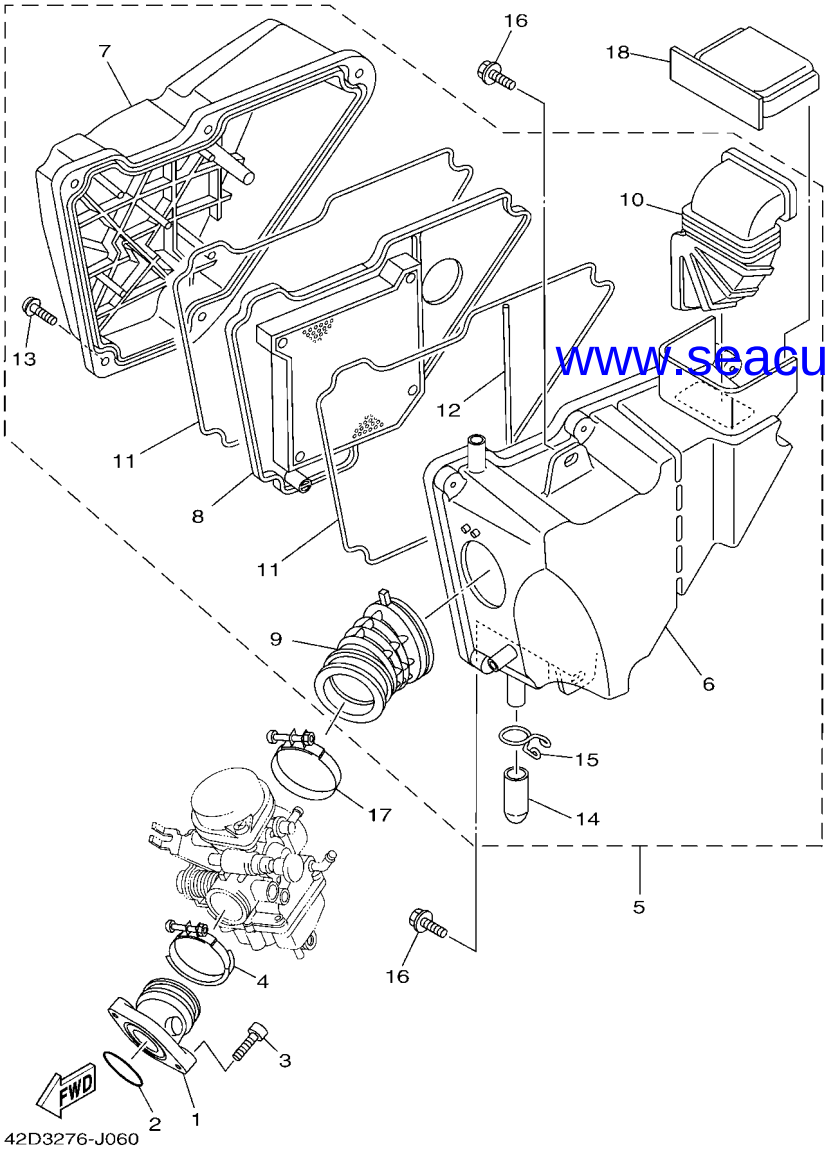

www.seacubemoto.com

FIG. 6 ADMISION — INTAKE

REF. Nº	CODIGO Nº PART NO.	DESCRIPCION DESCRIPTION	BH72					OBSERVACIONES REMARKS
1	4P2–E3586–00	TOBERA DE CARBURADOR 1 JOINT, CARBURETOR 1	1					
2	93210–30611	ANILLO O O-RING	1					
3	91312–06025	TORNILLO ALLEN BOLT, HEXAGON SOCKET HEAD	2					
4	90450–44804	BRIDA, MANGUERA HOSE CLAMP ASSY	1					
5	4P2–Y1441–02	FILTRO DE AIRE COMPLETO AIR CLEANER ASSY.	1					
6	5VL–E4411–00	.CAJA FILTRO DEL AIRE 1 .CASE, AIR CLEANER 1	1					
7	5VL–E4412–00	.TAPA CAJA DEL FILTRO 1 .CAP, CLEANER CASE 1	1					
8	5VL–E4450–02	.ELEMENTO COMP.FILTRO DE AIRE .ELEMENT ASSY, AIR CLEANER	1					
9	4P2–E4453–00	.UNION DEL FILTRO DEL AIRE 1 .JOINT, AIR CLEANER 1	1					
10	5VL–E4437–00	.CONDUCTO .DUCT	1					
11	5VL–E4452–00	.SELLO .SEAL	2					
12	5VL–E4462–00	.SELLO .SEAL	1					
13	97602–06220	.TORNILLO CON RONDONA .SCREW, PAN HEAD W/WASHER	5					
14	5VL–E443E–00	.TUBO, DRENAJE .PIPE, DRAIN	1					
15	5VL–E4424–01	.PRESILLA ACCESORIO DE TAPA .CLIP, CAP FITTING	1					
16	90119–06869	TORNILLO CON ARANDELA BOLT, WITH WASHER	2					
17	90450–51802	BRIDA, MANGUERA HOSE CLAMP ASSY	1					
18	5VL–E4417–00	CUBIERTA 1 COVER 1	1					

SEACUBE
ONE-STOP PARTS SOLUTION

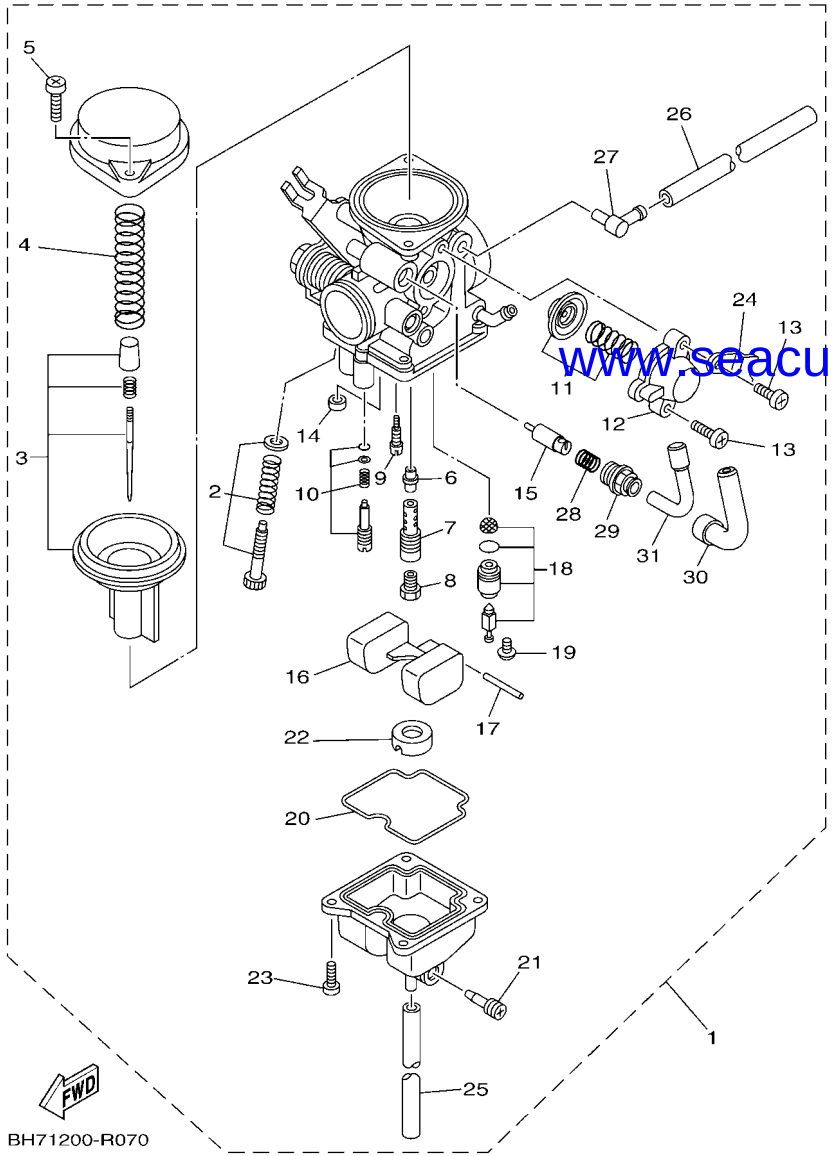

www.seacubemoto.com

FIG. 7 CARBURADOR — CARBURETOR

REF. Nº	CODIGO Nº PART NO.	DESCRIPCION DESCRIPTION	BH72					OBSERVACIONES REMARKS
1	BH7–E4301–00	CARBURADOR COMPLETO 1 CARBURETOR ASSY 1	1					
2	4P2–W149K–00	.CJTO. TORNILLO DEL RALENTI .THROTTLE SCREW SET	1					
3	4P2–W149J–00	.CJTO. AGUJA .NEEDLE SET	1					
4	4P2–E4286–00	.RESORTE .SPRING	1					
5	5LB–E4214–00	.TORNILLO DE CABEZA CON PLANA .SCREW, PAN HEAD	2					
6	5RS–E4341–00	.BOQUILLA PRINCIPAL .NOZZLE, MAIN	1					
7	5RS–E4341–10	.BOQUILLA PRINCIPAL .NOZZLE, MAIN	1					
8	288–E4343–60	.INYECTOR PRINCIPAL (#120) .JET, MAIN (#120)	1					
9	5LB–E4342–17	.ESPREA DE PILOTO (# 34) .JET, PILOT (# 34)	1					
10	4P2–W1415–00	.TORNILLO DE PILOTO .PILOT SCREW SET	1					
11	4P2–W149A–00	.CONTROL REMOTO .DIAPHRAGM SET 1	1					
12	5LB–E4293–00	.CUBIERTA .COVER 1	1					
13	97801–04010	.TORNILLO DE MUESCA .SCREW, PAN HEAD	2					
14	50M–E4355–00	.ASIENTO .NOZZLE, MAIN 2	1					
15	BH7–E4371–00	.EMBOLO DE ARRANQUE .PLUNGER, STARTER	1					
16	5LB–E4385–00	.BOIA .FLOAT	1					
17	5LB–E4386–00	.PASADOR DE BOIA .PIN, FLOAT	1					
18	5LB–E4390–00	.VALVULA DE AGUJA COMPLETA .NEEDLE VALVE ASSY	1					
19	98901–04006	.TORNILLO .SCREW, BIND	1					
20	5LB–E4384–00	.EMPAQUE DE CAMARA DE BOIA .GASKET, FLOAT CHAMBER	1					
21	4JP–E4323–00	.TORNILLO DE AJUSTE DE AIRE .SCREW, AIR ADJUSTING	1					
22	5LB–E4153–00	.PLACA,BAFFLE .PLATE,BAFFLE	1					
23	5LB–E4592–00	.TORNILLO .SCREW	4					
24	5LB–E4292–00	.SOPORTE 2 .BRACKET 2	1					
25	4P2–E4196–00	.TUBO DE DRENASE .PIPE, OVER FLOW 1	1					
26	4P2–E4197–00	.TUBO RESPIRADERO .PIPE	1					
27	5FY–E4251–00	.NIPLE .NIPPLE	1					

SEACUBE
ONE-STOP PARTS SOLUTION

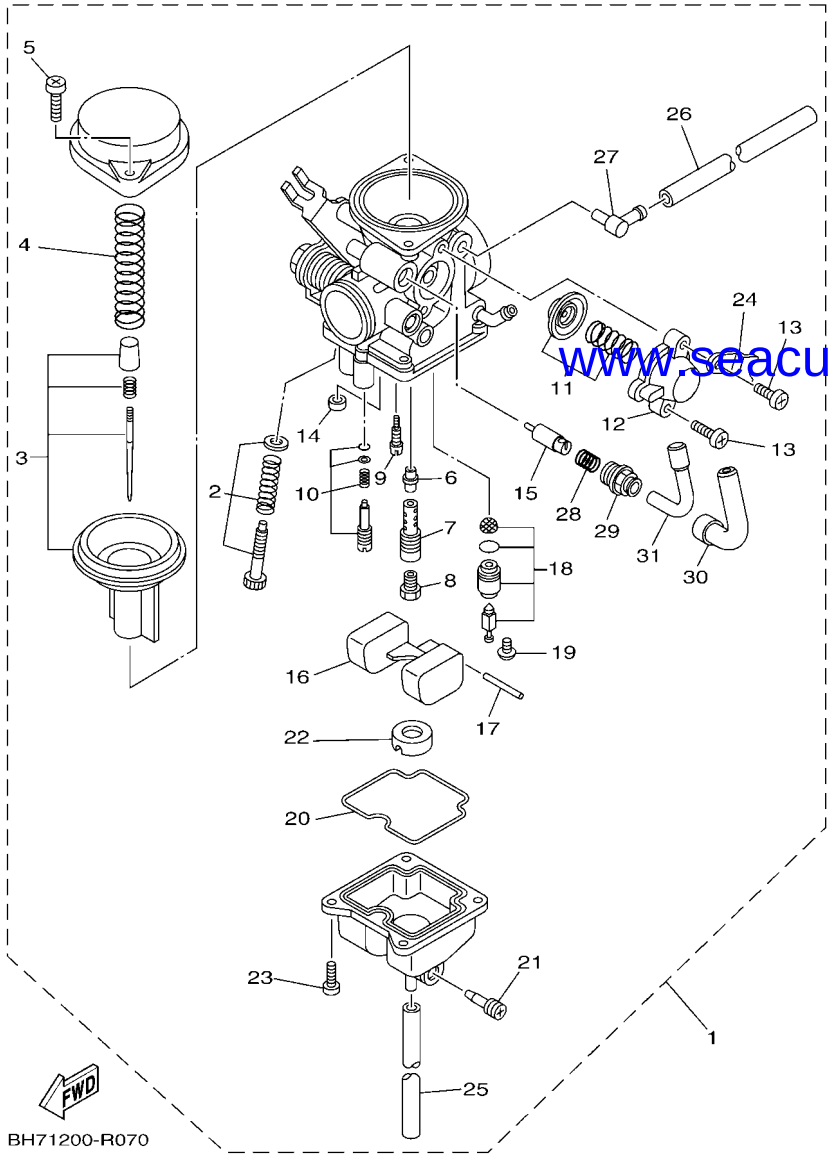

www.seacubemoto.com

FIG. 7 CARBURADOR — CARBURETOR

REF. Nº	CODIGO Nº PART NO.	DESCRIPCION DESCRIPTION	BH72					OBSERVACIONES REMARKS
28	BH7–E4335–00	.RESORTE DE EMBOLO .SPRING, PLUNGER	1					
29	5RS–14364–00	.FUNDA DE ARRANQUE .CAP, STARTER	1					
30	5EK–14363–00	.TAPA .CAP	1					
31	5EK–14349–00	.TUBO .PIPE	1					

SEACUBE
ONE-STOP PARTS SOLUTION

FIG. 8 DESCARGA — EXHAUST

REF. Nº	CODIGO Nº PART NO.	DESCRIPCION DESCRIPTION	BH72					OBSERVACIONES REMARKS
1	5VL–E4710–00	TUBO DE ESCAPE COMPLETO 1 MUFFLER ASSY 1	1					
2	4TU–F4741–00	.COJIN DE ASIENTO .PAD, SEAT	1					
3	5VL–E4758–00	.PROTECTOR DE SILENCIADOR .PROTECTOR, SILENCER	1					
4	5VL–E4628–00	.PROTECTOR DE TUBO DE ESCAPE .PROTECTOR, EXHAUST PIPE	1					
5	98980–06012	.TORNILLO DE LIGAR .SCREW, BIND	6					
6	90206–06090	.ARANDELA ONDULADA .WASHER, WAVE	6					
7	90201–05803	.ARANDELA PLANA .WASHER, PLATE	6					
8	90201–05804	.ARANDELA PLANA .WASHER, PLATE	6					
9	5VL–E4613–00	JUNTA, TUBO DE ESCAPE GASKET, EXHAUST PIPE	1					
10	91312–06020	TORNILLO BOLT	2					
11	95812–08020	TORNILLO DE REBORDE BOLT, FLANGE	1					

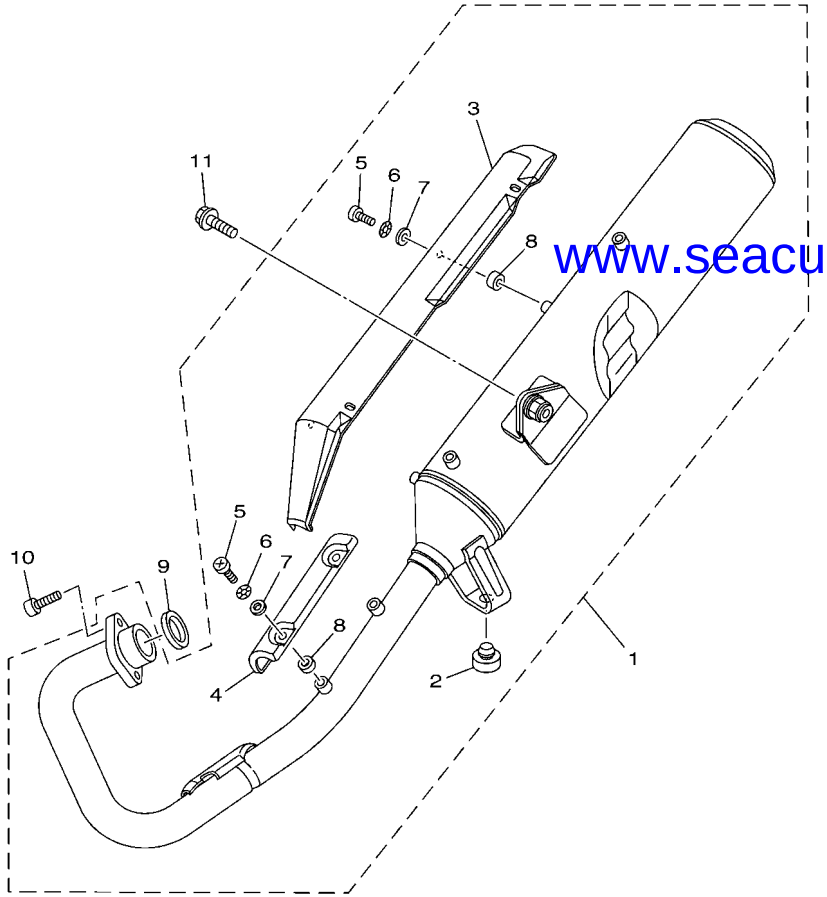

2D71516-C080

www.seacubemoto.com

SEACUBE
ONE-STOP PARTS SOLUTION

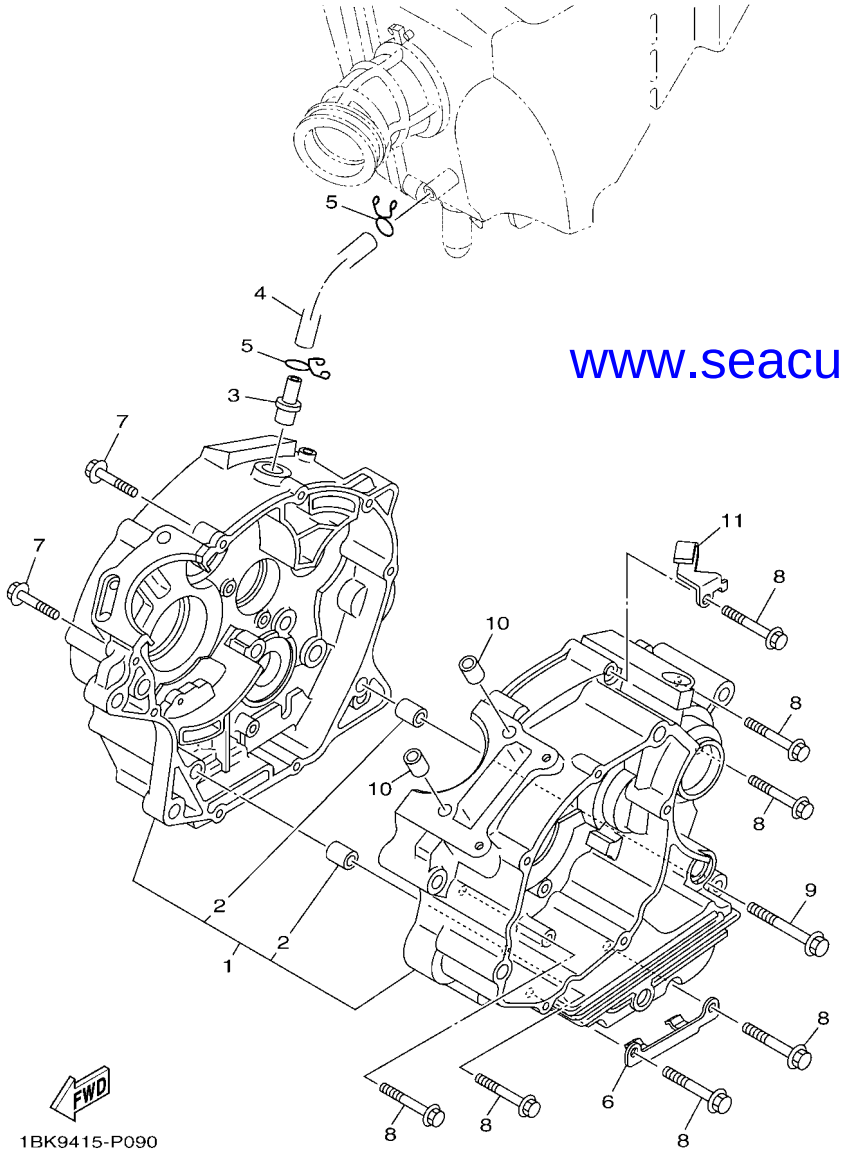

www.seacubemoto.com

FIG. 9 CARTER — CRANKCASE

REF. Nº	CODIGO Nº PART NO.	DESCRIPCION DESCRIPTION	BH72					OBSERVACIONES REMARKS
1	1SF–W1510–00	CARTER COMPLETO CRANKCASE ASSY	1					
2	99530–10114	.PASADOR, DE ESPIGA .PIN, DOWEL	2					
3	4FP–E1167–00	CUBIERTA RESPIRADERO 2 PIPE, BREATHER 2	1					
4	5VL–E1166–00	TUBO RESPIRADERO 1 PIPE, BREATHER 1	1					
5	90467–12828	PRESILLA CLIP	2					
6	2MP–E5118–00	SOPORTE HOLDER	1					
7	95022–06030	PERNO, DE BRIDA BOLT, FLANGE	2					
8	95022–06045	PERNO, DE BRIDA BOLT, FLANGE	7					
9	95022–06055	PERNO, DE BRIDA BOLT, FLANGE	1					
10	99530–10114	PASADOR, DE ESPIGA PIN, DOWEL	2					
11	5VL–E5441–01	SOSTEN DE CABLE DE EMBRAGUE HOLDER, CLUTCH CABLE	1					

SEACUBE
ONE-STOP PARTS SOLUTION

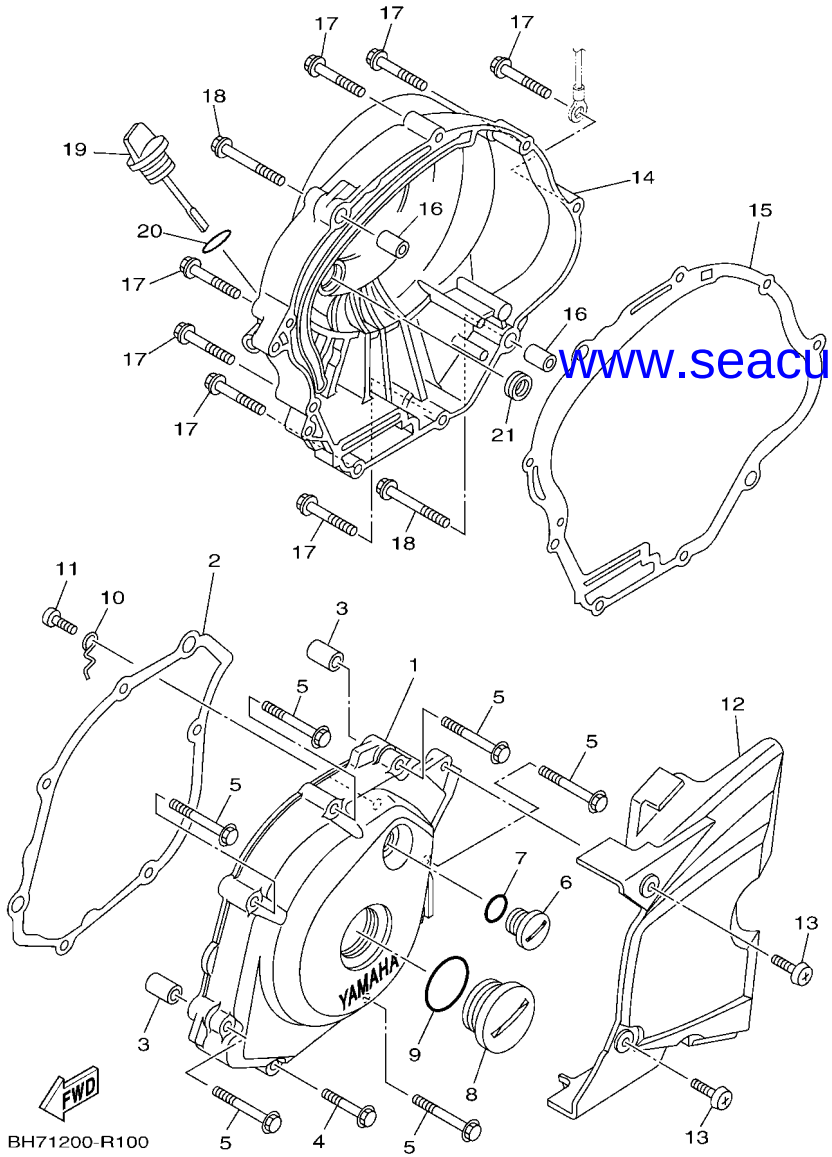

FIG. 10 CUBIERTA DE CARTER 1 — CRANKCASE COVER 1

REF. Nº	CODIGO Nº PART NO.	DESCRIPCION DESCRIPTION	BH72					OBSERVACIONES REMARKS
1	BH7–E5411–00	CUBIERTA DE CARTER 1 COVER, CRANKCASE 1	1					
2	5VL–E5451–10	EMPAQ DE CUBIERTA DE CARTER GASKET, CRANKCASE COVER 1	1					
3	99530–10114	PASADOR, DE ESPIGA PIN, DOWEL	2					
4	95022–06035	PERNO, DE BRIDA BOLT, FLANGE	1					
5	95022–06050	PERNO, DE BRIDA BOLT, FLANGE	6					
6	90340–14805	TORNILLO, DE DRENAJE PLUG, STRAIGHT SCREW	1					
7	93210–14817	ANILLO O O-RING	1					
8	90340–32069	TORNILLO, DE DRENAJE PLUG, STRAIGHT SCREW	1					
9	93210–32A4	ANILLO O O-RING	1					
10	5VL–E5191–00	PLACA PLATE	1					
11	98512–06010	TORNILLO SCREW, PAN HEAD	1					
12	18C–E5418–00	CUBIERTA CAJA DE CADENA COVER, CHAIN CASE	1					
13	98902–06016	TORNILLO DE LIGAR SCREW, BIND	2					
14	5VL–E5421–30	TAPA DE CARTER DERECHA COVER, CRANKCASE 2	1					
15	5VL–E5461–10	JUNTA TAPA CARTER DERECHO 2 GASKET, CRANKCASE COVER 2	1					
16	99530–10114	PASADOR, DE ESPIGA PIN, DOWEL	2					
17	95022–06035	PERNO, DE BRIDA BOLT, FLANGE	7					
18	95022–06045	PERNO, DE BRIDA BOLT, FLANGE	2					
19	5VL–E5362–00	TAPON DEL NIVEL DE ACEITE PLUG, OIL LEVEL	1					
20	93210–19809	ANILLO O O-RING	1					
21	93101–10800	SELLO ACEITE OIL SEAL	1					

www.seacubemoto.com

SEACUBE
ONE-STOP PARTS SOLUTION

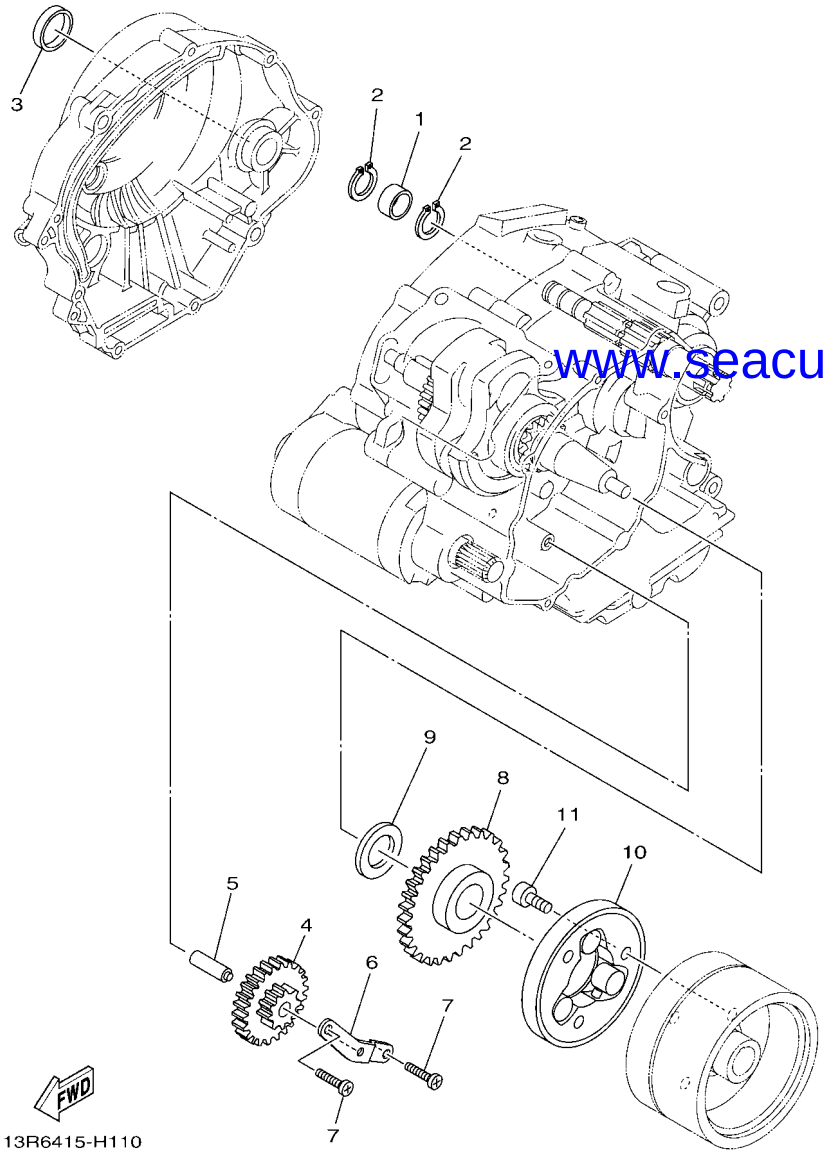

FIG. 11 EMBRAGUE DEL ARRANQUE STARTER CLUTCH

REF. Nº	CODIGO Nº PART NO.	DESCRIPCION DESCRIPTION	BH72					OBSERVACIONES REMARKS
1	90387–15803	ESPACIADOR COLLAR	1					
2	99009–15400	PRESILLA REDONDA CIRCLIP	2					
3	90338–30816	TAPON PLUG	1					
4	5VL–E5512–00	ENGRENAJE NEUTRO GEAR, IDLER 1	1					
5	5VL–E5521–00	EJE 1 SHAFT 1	1					
6	5VL–E5532–00	PLACA DE ENGRENAJE NEUTRO PLATE, IDLE GEAR	1					
7	98512–06012	TORNILLO SCREW, PAN HEAD	2					
8	5VL–E5517–00	ENGRENAJE POSICION 2DA GEAR, IDLER 2	1					
9	90201–258D7	ARANDELA PLANA WASHER, PLATE	1					
10	1BK–E5580–11	ENSAMBLE EXT.EMBRAGUE ARRANQUE STARTER CLUTCH OUTER ASSY	1					
11	91312–08016	TORNILLO BOLT	3					

www.seacubemoto.com

SEACUBE
ONE-STOP PARTS SOLUTION

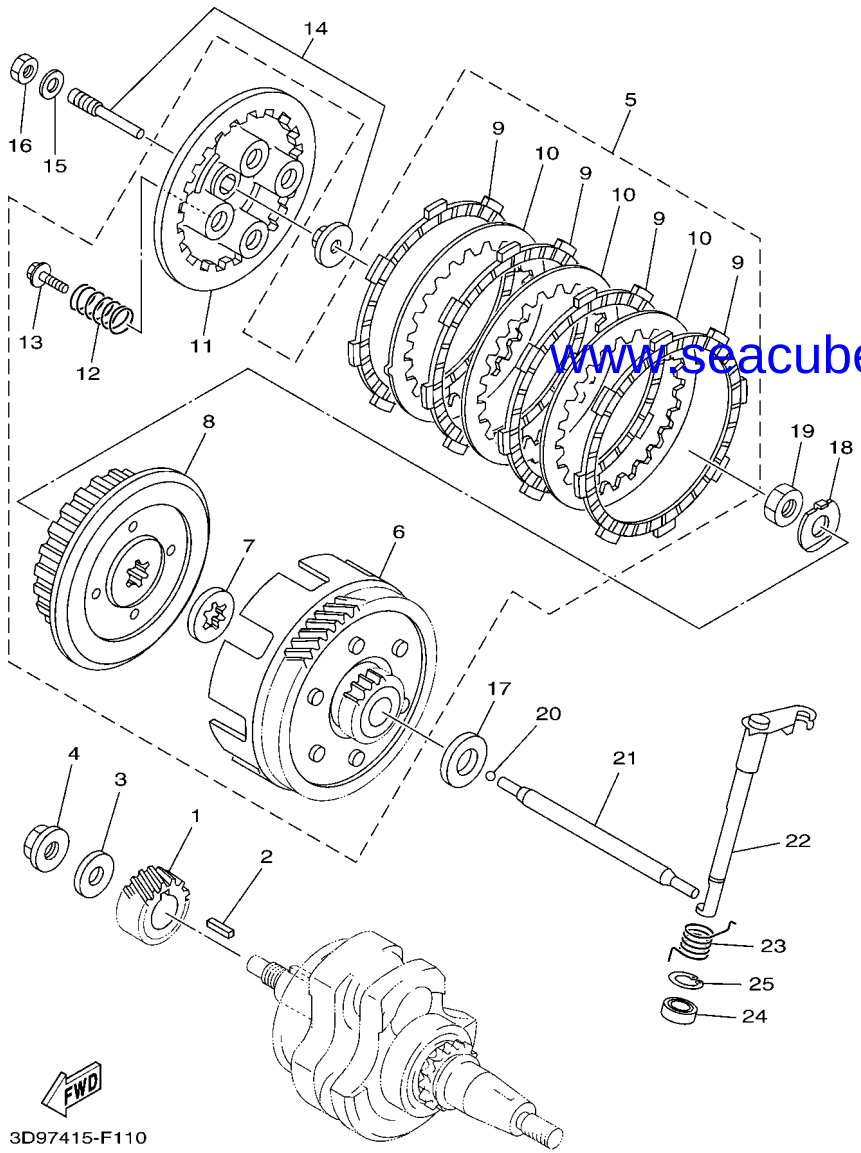

FIG. 12 EMBRAGUE — CLUTCH

REF. Nº	CODIGO Nº PART NO.	DESCRIPCION DESCRIPTION	BH72					OBSERVACIONES REMARKS
1	5VL–E6111–00	ENGRANAJE TRACC.PRIMARIA GEAR, PRIMARY DRIVE	1					
2	90282–05001	CHAVETA, RECTA (5MMX16MM) KEY, STRAIGHT (5MMX16MM)	1					
3	90201–122H1	ARANDELA PLANA WASHER, PLATE	1					
4	90179–12813	TUERCA NUT	1					
5	5VL–E6300–10	EMBRAGUE COMPLETO CLUTCH ASSY	1					
6	5VL–E6150–00	.CAMPANA DE EMBRAGUE .PRIMARY DRIVEN GEAR COMP.	1					
7	5VL–E6154–00	.ARANDELA, DE EMPUJE 1 .PLATE, THRUST 1	1					
8	5VL–E6371–10	.CUBO, DE EMBRAGUE .BOSS, CLUTCH	1					
9	5VL–E6321–10	.PLACA DE FRICCION .PLATE, FRICTION	4					
10	5VL–E6324–00	.PLACA DE EMBRAGUE .PLATE, CLUTCH 1	3					
11	5VL–E6351–00	.PLATO DE PRESION .PLATE, PRESSURE 1	1					
12	5VL–E6333–10	.RESORTE DE EMBRAGUE 1 .SPRING, CLUTCH 1	4					
13	5VL–E6337–00	.TORNILLO DE RESORTE .SCREW, SPRING	4					
14	5VL–Y1635–10	CONJ. PALANCA DE EMPUJE PUSH LEVER COMP.	1					
15	92902–06200	ARANDELA WASHER	1					
16	95302–06600	TUERCA NUT, HEXAGON	1					
17	5VL–E6164–10	PLACA DE EMPUJE 2 PLATE, THRUST 2	1					
18	90215–12211	ARANDELA DE CIERRE WASHER, LOCK	1					
19	90170–12060	TUERCA NUT	1					
20	93503–16824	ESFERA BALL	1					
21	5VL–E6357–01	VARILLA DE EMPUJE 2 ROD, PUSH 2	1					
22	5VL–E6381–02	CONJ. PALANCA DE EMPUJE PUSH LEVER COMP.	1					
23	90508–16800	RESORTE DE TORSION SPRING, TORSION	1					
24	93102–12812	SELLO ACEITE OIL SEAL	1					
25	99009–20500	PRESILLA REDONDA CIRCLIP	1					

www.seacubemoto.com

SEACUBE
ONE-STOP PARTS SOLUTION

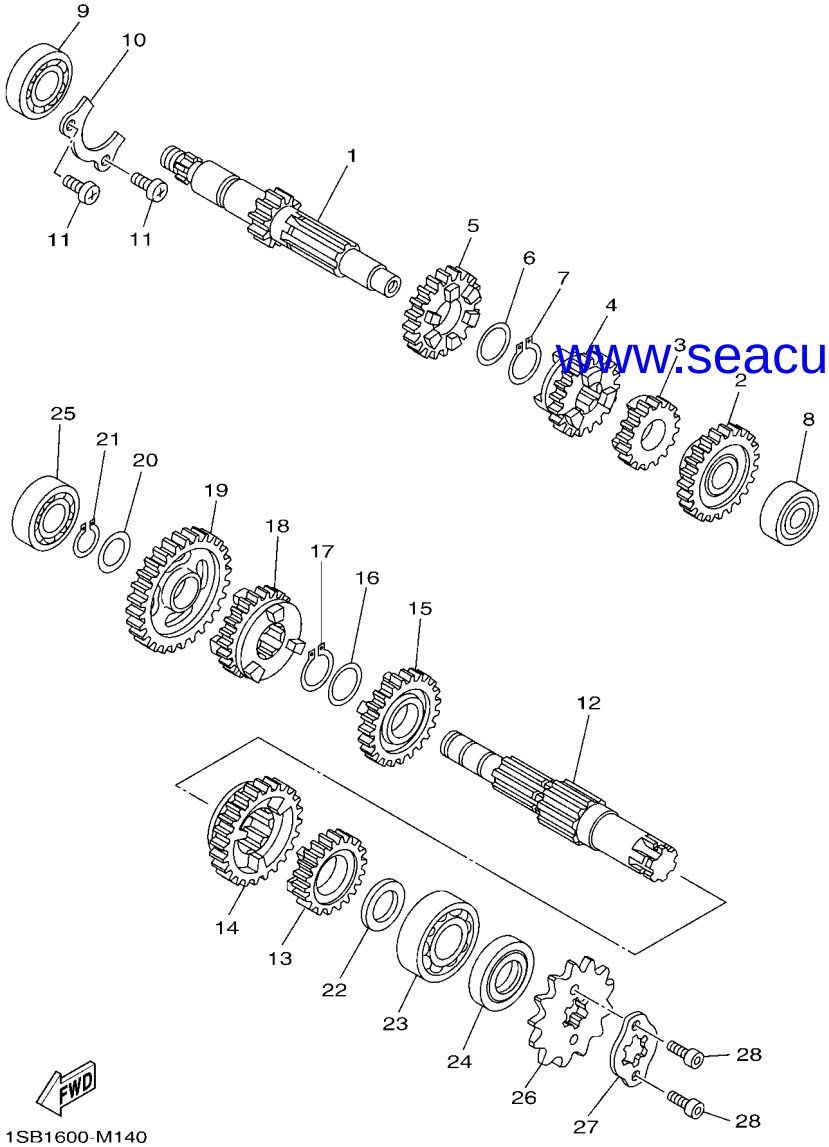

FIG. 13 TRANSMISION — TRANSMISSION

REF. Nº	CODIGO Nº PART NO.	DESCRIPCION DESCRIPTION	BH72					OBSERVACIONES REMARKS
1	5VL–E7411–00	EJE PRIMARIO (14T) AXLE, MAIN (14T)	1					
2	5VL–E7151–00	ENGRANAJE PINON DE 5TA (24T) GEAR, 5TH PINION (24T)	1					
3	5VL–E7121–00	ENGRANAJE DE PINON DE 2DA(18T) GEAR, 2ND PINION (18T)	1					
4	5VL–E7131–00	ENGRANAJE PINON DE 3RA (19T) GEAR, 3RD PINION (19T)	1					
5	5VL–E7141–00	ENGRANAJE PINON DE 4TA (22T) GEAR, 4TH PINION (22T)	1					
6	90201–20266	ARANDELA, PLACA (T=1.0) WASHER, PLATE (T=1.0)	1					
7	93410–20809	SEGURO CIRCLIP	1					
8	93306–201Y8	COJINETE BEARING	1					
9	93306–253YJ	COJINETE BEARING	1					
10	5VL–E7471–00	PLACA, DE CUBIERTA PLATE, COVER	1					
11	98512–06012	TORNILLO SCREW, PAN HEAD	2					
12	5VL–E7402–00	EJE DE TRACCION COMPLETO DRIVE AXLE ASSY	1					
13	5VL–E7251–00	ENGRANAJE RUEDA DE 5TA (21T) GEAR, 5TH WHEEL (21T)	1					
14	5VL–E7221–00	ENGRANAJE RUEDA DE 2DA (32T) GEAR, 2ND WHEEL (32T)	1					
15	5VL–E7231–00	ENGRANAJE RUEDA DE 3RA (25T) GEAR, 3RD WHEEL (25T)	1					
16	90201–20266	ARANDELA, PLACA (T=1.0) WASHER, PLATE (T=1.0)	1					
17	93410–20809	SEGURO CIRCLIP	1					
18	5VL–E7241–00	ENGRANAJE DE RUEDA 4TA (23T) GEAR, 4TH WHEEL (23T)	1					
19	5VL–E7211–00	ENGRANAJE RUEDA DE 1 RA (37T) GEAR, 1ST WHEEL (37T)	1					
20	90201–15700	ARANDELA PLANA WASHER, PLATE	1					
21	99009–15400	PRESILLA REDONDA CIRCLIP	1					
22	90201–20272	ARANDELA PLANA WASHER, PLATE	1					
23	93306–204YD	COJINETE BEARING	1					
24	93102–20854	SELLO ACEITE OIL SEAL	1					
25	93306–252YM	COJINETE BEARING	1					
26	93822–14813	CORONA (14T) SPROCKET, DRIVE (14T)	1					
27	3D9–E7456–01	SOPORTE DE CORONA HOLDER, SPROCKET	1					

www.seacubemoto.com

SEACUBE
ONE-STOP PARTS SOLUTION

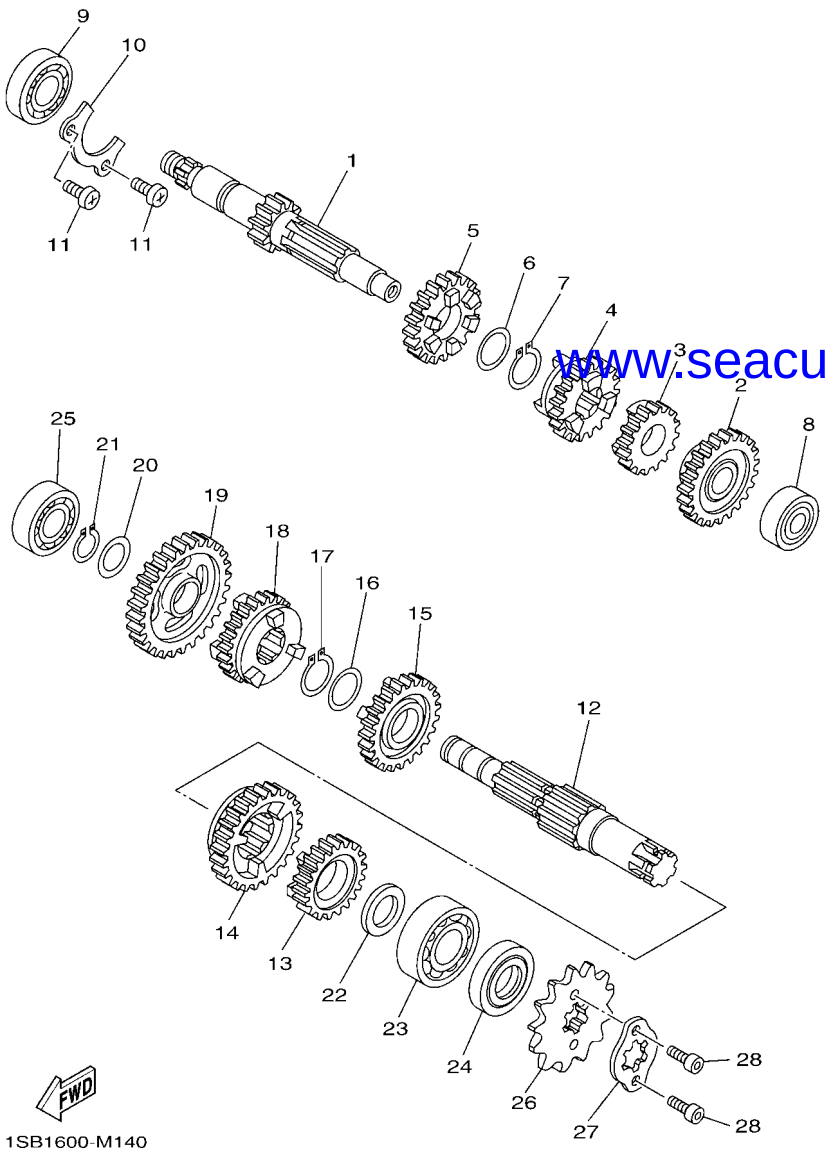

www.seacubemoto.com

FIG. 13 TRANSMISION — TRANSMISSION

REF. Nº	CODIGO Nº PART NO.	DESCRIPCION DESCRIPTION	BH72					OBSERVACIONES REMARKS
28	91312–05010	TORNILLO BOLT	2					

SEACUBE
ONE-STOP PARTS SOLUTION

FIG. 14 LEVA DE CAMBIO & HORQUILLA — SHIFT CAM & FORK

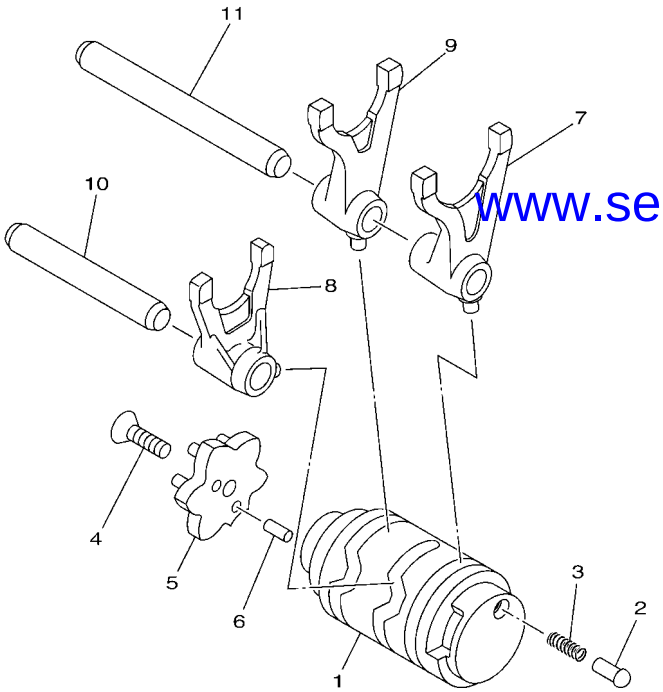

46S3415-M150

REF. Nº	CODIGO Nº PART NO.	DESCRIPCION DESCRIPTION	BH72					OBSERVACIONES REMARKS
1	1SF–E8541–00	LEVA DE CAMBIO CAM,SHIFT	1					
2	1JD–E8542–00	PUNTO MUERTO POINT, NEUTRAL	1					
3	90501–06805	RESORTE DE COMPRESION SPRING, COMPRESSION	1					
4	90151–06818	TORNILLO EMBUTIDO SCREW, COUNTERSUNK	1					
5	1BK–E8185–00	SEGMENTO DE RETENCION SEGMENT	1					
6	93604–10837	PASADOR DE CLAVIJA PIN, DOWEL	2					
7	2D0–E8511–00	HORQUILLA DEL CAMBIO 1 FORK, SHIFT 1	1					
8	2D0–E8512–00	HORQUILLA DEL CAMBIO 2 FORK, SHIFT 2	1					
9	2D0–E8513–00	HORQUILLA DEL CAMBIO 3 FORK, SHIFT 3	1					
10	5VL–E8531–00	BARRA GUIA HORQ. CAMBIO 1 BAR, SHIFT FORK GUIDE 1	1					
11	5VL–E8535–00	BARRA GUIA HORQ .CAMBIO 2 BAR, SHIFT FORK GUIDE 2	1					

www.seacubemoto.com

SEACUBE
ONE-STOP PARTS SOLUTION

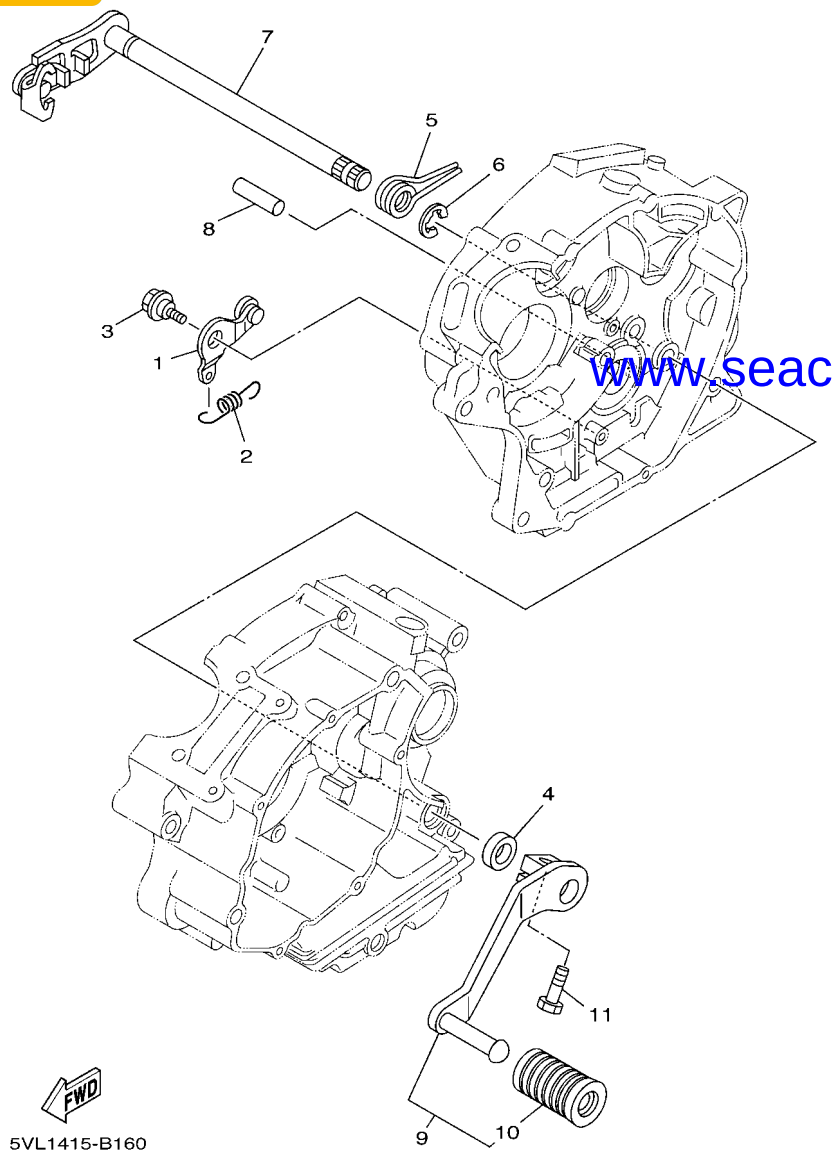

FIG. 15 EJE DE CAMBIO & PEDAL — SHIFT SHAFT

REF. Nº	CODIGO Nº PART NO.	DESCRIPCION DESCRIPTION	BH72					OBSERVACIONES REMARKS
1	5VL–E8140–00	PALANCA DE TOPE COMPLETA STOPPER LEVER ASSY	1					
2	5VL–E8337–00	RESORTE SPRING	1					
3	4FP–E8177–00	TORNILLO DE TOPE BOLT, STOPPER	1					
4	93101–12803	SELLO ACEITE OIL SEAL	1					
5	90508–32801	RESORTE DE TORSION SPRING, TORSION	1					
6	99002–10600	PRESILLA REDONDA CIRCLIP	1					
7	5VL–E8101–12	EJE SELECTOR COMPLETO SHIFT SHAFT ASSY	1					
8	93608–30839	PASADOR DE CLAVIJA PIN, DOWEL	1					
9	5VL–E8110–01	PEDAL DE CAMBIO COMPLETO SHIFT PEDAL ASSY	1					
10	1KL–E8113–00	.FUNDA DEL PEDAL DEL CAMBIO .COVER, SHIFT PEDAL	1					
11	97022–06020	PERNO BOLT, HEXAGON	1					

www.seacubemoto.com

SEACUBE
ONE-STOP PARTS SOLUTION

FIG. 16 CUADRO — FRAME

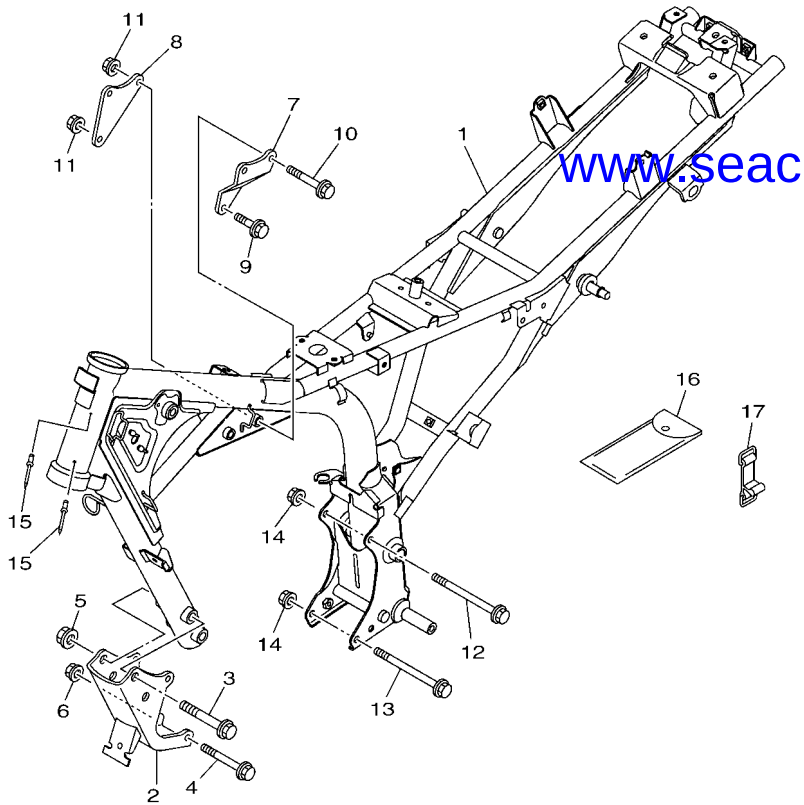

BH71200-R160

www.seacubemoto.com

REF. Nº	CODIGO Nº PART NO.	DESCRIPCION DESCRIPTION	BH72					OBSERVACIONES REMARKS
1	BH7–F1110–00	ARMAZON COMPLETO FRAME COMP.	1					
2	1BK–F1316–20	SOPORTE DE MOTOR 2 STAY, ENGINE 2	1					
3	95812–10080	TORNILLO DE REBORDE BOLT, FLANGE	2					
4	90105–08874	TORNILLO BOLT, FLANGE	2					
5	90179–10807	TUERCA NUT	2					
6	90179–08830	TUERCA NUT	2					
7	BH7–F1317–00	SOPORTE DE MOTOR 3 STAY, ENGINE 3	1					
8	5VL–F1318–00	SOPORTE DE MOTOR 4 STAY, ENGINE 4	1					
9	90105–088E4	TORNILLO BOLT, FLANGE	1					
10	90105–088E5	TORNILLO BOLT, FLANGE	2					
11	90179–08830	TUERCA NUT	3					
12	90105–088D8	TORNILLO BOLT, FLANGE	1					
13	90105–088E6	TORNILLO BOLT, FLANGE	1					
14	90179–08830	TUERCA NUT	2					
15	90267–32845	REMACHE CIEGO RIVET, BLIND	2					
16	5VL–F8100–10	JUEGO DE HERRAMIENTAS TOOL KIT	1					
17	5VL–F811G–01	CINTA BAND	1					

SEACUBE
ONE-STOP PARTS SOLUTION

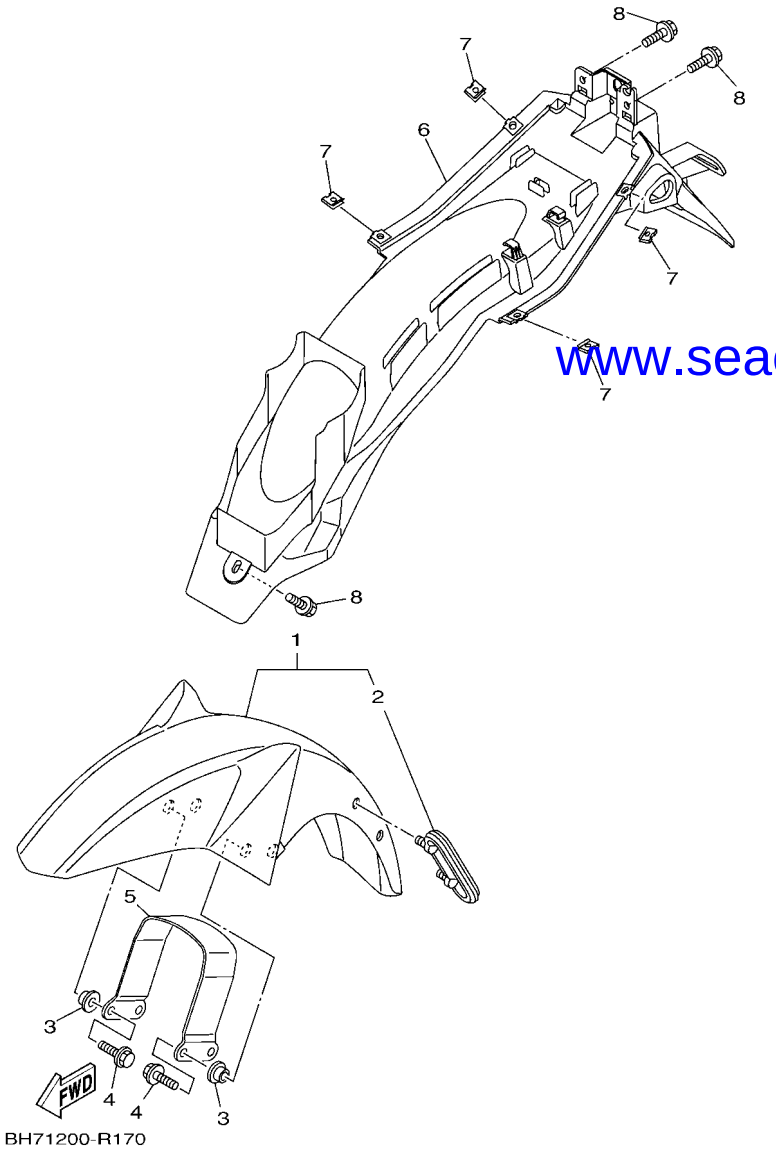

www.seacubemoto.com

FIG. 17 GUARDABARRO — FENDER

REF. Nº	CODIGO Nº PART NO.	DESCRIPCION DESCRIPTION	BH72					OBSERVACIONES REMARKS
1	1BK–Y2151–10–P4	GUARDABARRO DELANTERO COMPL. FRONT FENDER ASSY	1					UR PARA SMX UR FOR SMX
	1BK–Y2151–10–P5	GUARDABARRO DELANTERO COMPL. FRONT FENDER ASSY	1					UR PARA RM7 UR FOR RM7
	1BK–Y2151–10–P6	GUARDABARRO DELANTERO COMPL. FRONT FENDER ASSY	1					UR PARA BWC1 UR FOR BWC1
	1BK–Y2151–10–P3	GUARDABARRO DELANTERO COMPL. FRONT FENDER ASSY	1					UR PARA DOMC UR FOR DOMC
2	5VL–F1518–01	.SOPORTE DE CABLE .HOLDER, CABLE	1					
3	90387–07818	ESPACIADOR COLLAR	4					
4	95022–06020	PERNO, DE BRIDA BOLT, FLANGE	4					
5	18C–F1513–01	SOPORTE DE GUARDABARRO STAY, FENDER 1	1					
6	1BK–F1611–10	GUARDABARRO TRASERO FENDER, REAR	1					
7	90183–05807	TUERCA DE RESORTE NUT, SPRING	4					
8	90119–06869	TORNILLO CON ARANDELA BOLT, WITH WASHER	3					

SEACUBE
ONE-STOP PARTS SOLUTION

FIG. 18 CUBIERTA LATERAL — SIDE COVER

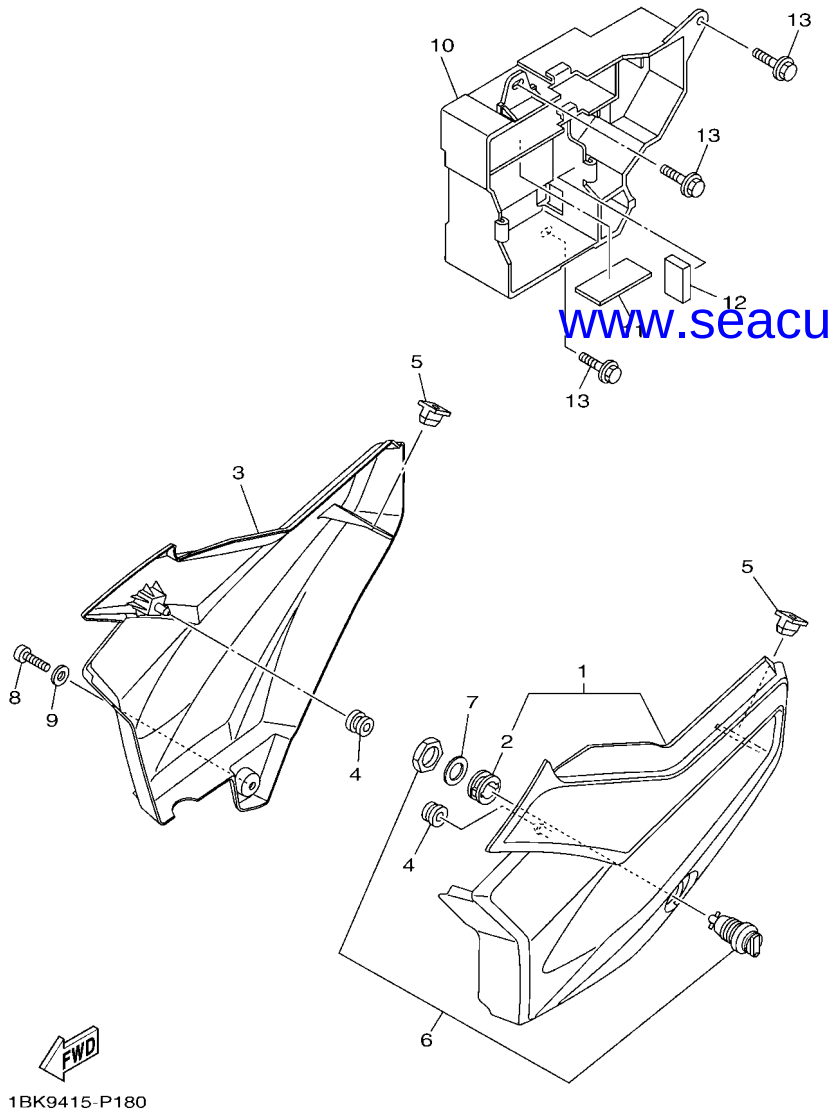

www.seacubemoto.com

REF. Nº	CODIGO Nº PART NO.	DESCRIPCION DESCRIPTION	BH72					OBSERVACIONES REMARKS
1	1BK–Y2171–10	CUBIERTA, LATERAL 1 COVER, SIDE 1	1					
2	90480–24186	.TAPON .GROMMET	1					
3	1BK–F1721–10	CUBIERTA LATERAL 2 COVER, SIDE 2	1					
4	90480–13837	TAPON GROMMET	2					
5	5VL–F1778–00	AMORTIGUADOR DE MONTAJE DAMPER, LOCATING 1	2					
6	5VL–F1780–01	CERRADURA COMPLETA LOCK ASSY	1					
7	90201–228F6	ARANDELA PLANA WASHER, PLATE	1					
8	98902–06020	TORNILLO DE LIGAR SCREW, BIND	1					
9	90201–06850	ARANDELA PLANA WASHER, PLATE	1					
10	3D9–F177G–01	CAJA DE BATERIA BOX, BATTERY	1					
11	5VL–F1746–00	AMORTIGUADOR DAMPER	1					
12	3D9–F1747–00	AMORTIGUADOR DAMPER	1					
13	90119–06811	TORNILLO CON ARANDELA BOLT, WITH WASHER	3					

SEACUBE
ONE-STOP PARTS SOLUTION

FIG. 19 BRAZO TRASERO & SUSPENSION — REAR ARM & SUSPENSION

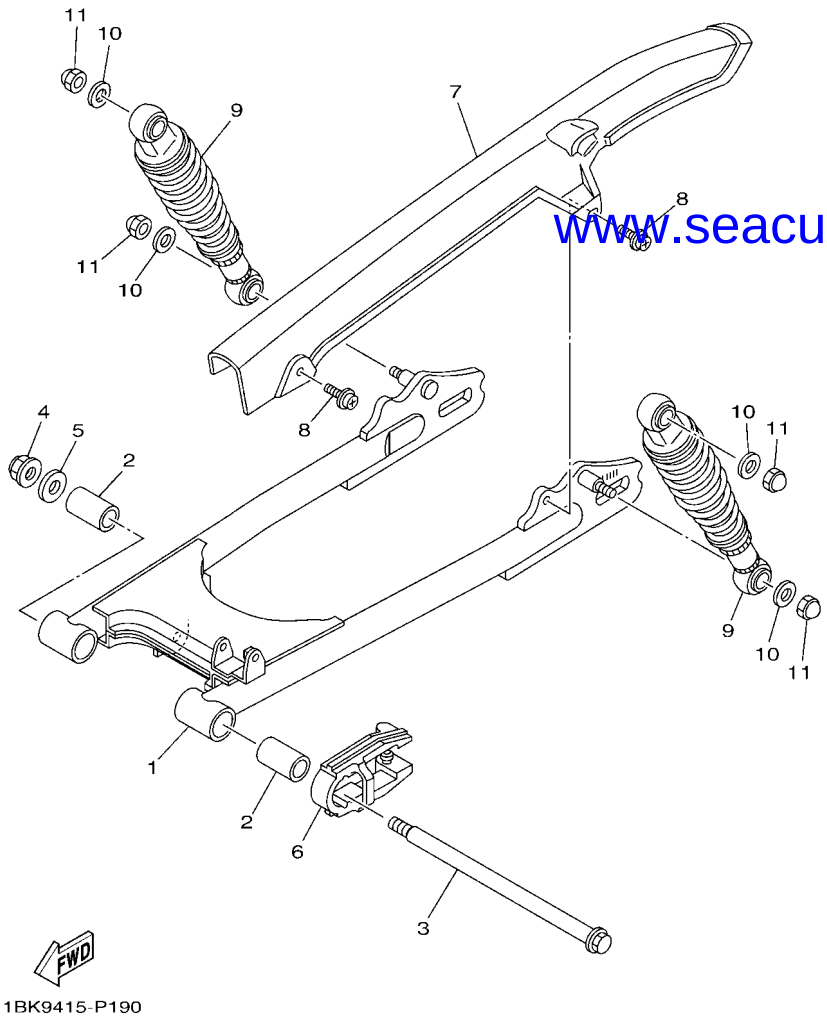

REF. Nº	CODIGO Nº PART NO.	DESCRIPCION DESCRIPTION	BH72					OBSERVACIONES REMARKS
1	1BK–F2110–00	BRAZO TRASERO COMPLETO REAR ARM COMP.	1					
2	90388–14800	AMORTIGUADOR DAMPER	2					
3	5VL–F2141–01	EJE DEL BARCULANTE SHAFT, PIVOT	1					
4	95602–12200	TUERCA DE AUTO-CIERRE NUT, SELF-LOCKING	1					
5	90201–12819	ARANDELA PLANA WASHER, PLATE	1					
6	5VL–F2151–10	SELLO DE GUARDA SEAL, GUARD	1					
7	5VL–F2311–00	CABRECADENA CASE, CHAIN	1					
8	90159–06830	TORNILLO CON VALONA SCREW, WITH WASHER	2					
9	5VL–F2210–31	AMORTIGUADOR TRASERO COMPLETO SHOCK ABSORBER ASSY, REAR	2					
10	90201–108C7	ARANDELA PLANA WASHER, PLATE	4					
11	90176–10810	TUERCA CORONA NUT, CROWN	4					

www.seacubemoto.com

SEACUBE
ONE-STOP PARTS SOLUTION

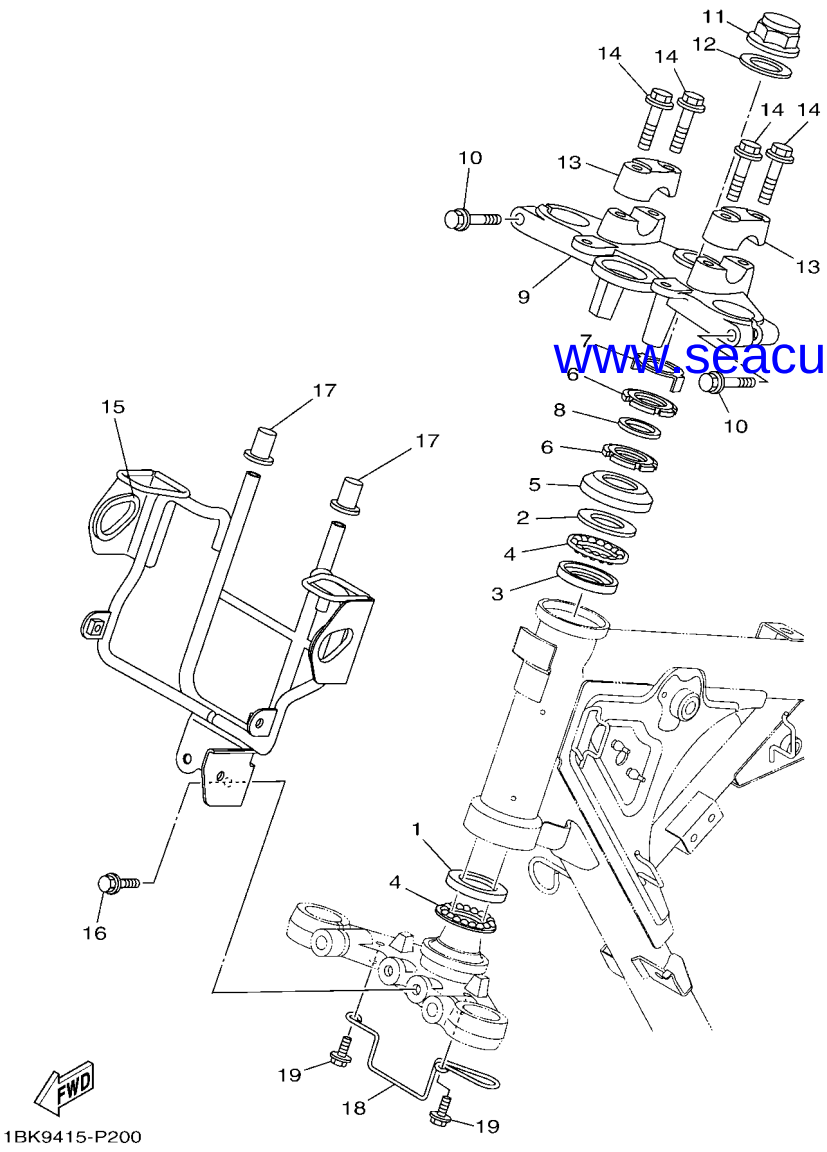

www.seacubemoto.com

FIG. 20 DIRECCION — STEERING

REF. Nº	CODIGO Nº PART NO.	DESCRIPCION DESCRIPTION	BH72					OBSERVACIONES REMARKS
1	1KL–F3412–00	PISTA DE BOLAS 2 RACE, BALL 2	1					
2	4FP–F3411–00	PISTA DE BOLAS 1 RACE, BALL 1	1					
3	4FP–F3412–00	PISTA DE BOLAS 2 RACE, BALL 2	1					
4	5VL–F341E–00	RETEN DE COJINETE RETAINER, BALL BEARING	2					
5	4GU–F3416–00	CUBIERTA DE BASE DE BOLA 2 COVER, BALL RACE 2	1					
6	90179–25806	TUERCA NUT	2					
7	5VL–F3418–01	ARANDELA ESPECIAL WASHER, SPECIAL	1					
8	90202–26142	ARANDELA DE PLANA WASHER, PLATE	1					
9	5VL–F3435–00–35	PLATINA SUPERIOR CROWN, HANDLE	1					SL SL
10	95022–08040	PERNO, DE BRIDA BOLT, FLANGE	2					
11	90176–22802	TUERCA CORONA NUT, CROWN	1					
12	5VL–F3165–01	ARANDELA DE FIELTRO WASHER, FELT	1					
13	3S9–F3441–00	SOPORTE DE MANUBRIO HOLDER, HANDLE UPPER	2					
14	95022–08035	PERNO, DE BRIDA BOLT, FLANGE	4					
15	1BK–F3174–50	SOPORTE DEL FARO DELANTERO STAY, HEADLIGHT	1					
16	95822–06016	TORNILLO DE REBORDE BOLT, FLANGE	2					
17	4FP–F317J–00	AMORTIGUADOR 1 DAMPER 1	2					
18	5VL–F3389–01	GUIA DE CABLE GUIDE, CABLE	1					
19	95822–06012	TORNILLO DE REBORDE BOLT, FLANGE	2					

SEACUBE
ONE-STOP PARTS SOLUTION

FIG. 21 HORQUILLA DELANTERA — FRONT FORK

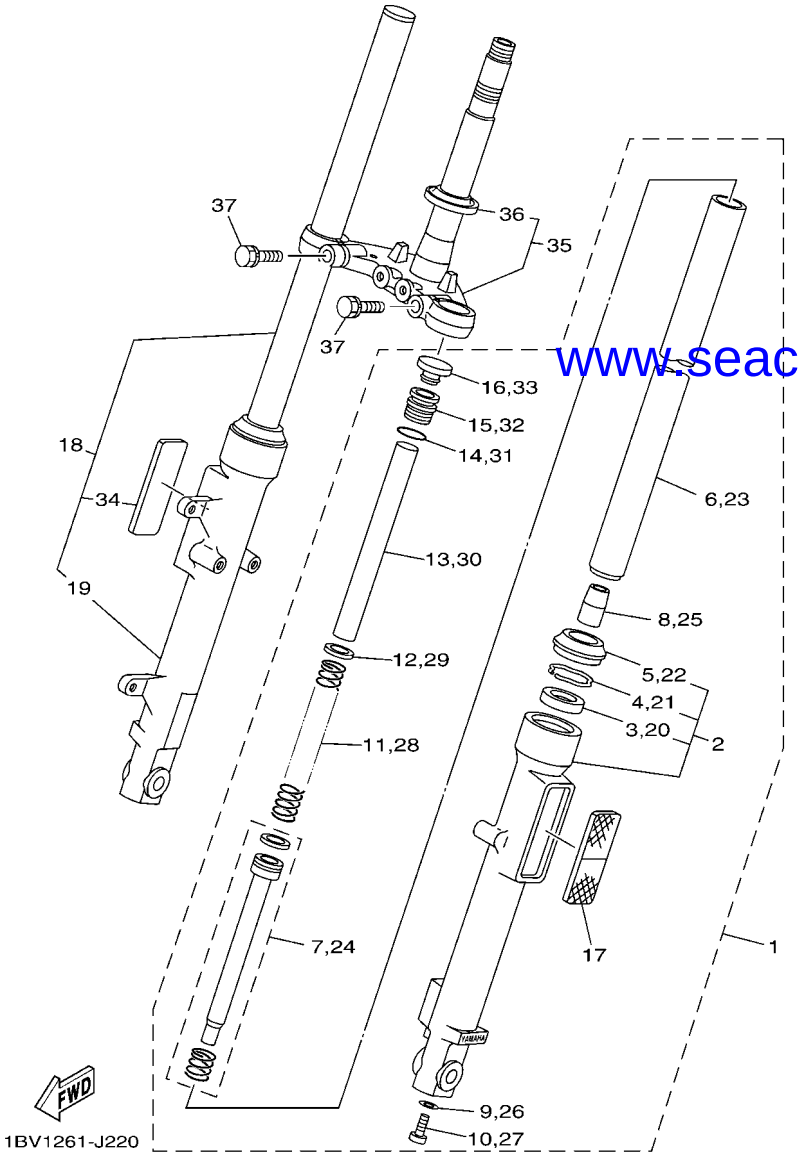

www.seacubemoto.com

REF. Nº	CODIGO Nº PART NO.	DESCRIPCION DESCRIPTION	BH72					OBSERVACIONES REMARKS
1	5VL–F3102–E0	HORQUILLA DELANTERA COMPL.(MI) FRONT FORK ASSY (L.H)	1					
2	5VL–F3106–D0	.TUBO EXTERIOR COMPLETO .OUTER TUBE COMP.	1					
3	1ST–F3145–00	..RETEN DE ACEITE ..OIL SEAL	1					
4	5AP–F3153–00	..ANILLO DE ENGANCHE ..RING, SNAP	1					
5	1ST–F3144–00	..GUARDAPOLVO ..SEAL, DUST	1					
6	5HH–F3110–22	.TUBO INTERIOR COMPLETO 1 .INNER TUBE COMP.1	1					
7	5VL–F3170–01	.CILINDRO COMPL DE HORQ DELANT .CYLINDER COMP., FRONT FORK	1					
8	4GU–F3173–01	.VASTAGO AHUSADO .SPINDLE, TAPER	1					
9	4TU–F3479–00	.EMPAQUE .GASKET	1					
10	5LK–F3356–01	.PERNO 2 .BOLT 2	1					
11	5VL–F3141–40	.RESORTE HORQUILLA DELANT. .SPRING, FRONT FORK	1					
12	5AP–F3427–00	.ARANDELA .WASHER	1					
13	5HH–F3118–10	.SEPARADOR .SPACER	1					
14	5AP–F3147–00	.ARO .O-RING	1					
15	5VL–F3111–20	.PERNO DE TAPA .BOLT, CAP	1					
16	5VL–F3154–00	.TAPON TUBO INTERIOR .CAP	1					
17	5VL–H5110–40	.REFLECTOR COMPLETO .REFLECTOR ASSY	1					
18	5VL–F3103–E0	HORQUILLA DELANTERA COMPL.(MD) FRONT FORK ASSY (R.H)	1					
19	5VL–F3107–D0	.TUBO EXTERIOR COMPLETO .OUTER TUBE COMP.	1					
20	1ST–F3145–00	..RETEN DE ACEITE ..OIL SEAL	1					
21	5AP–F3153–00	..ANILLO DE ENGANCHE ..RING, SNAP	1					
22	1ST–F3144–00	..GUARDAPOLVO ..SEAL, DUST	1					
23	5HH–F3110–22	.TUBO INTERIOR COMPLETO 1 .INNER TUBE COMP.1	1					
24	5VL–F3170–01	.CILINDRO COMPL DE HORQ DELANT .CYLINDER COMP., FRONT FORK	1					
25	4GU–F3173–01	.VASTAGO AHUSADO .SPINDLE, TAPER	1					
26	4TU–F3479–00	.EMPAQUE .GASKET	1					
27	5LK–F3356–01	.PERNO 2 .BOLT 2	1					

SEACUBE
ONE-STOP PARTS SOLUTION

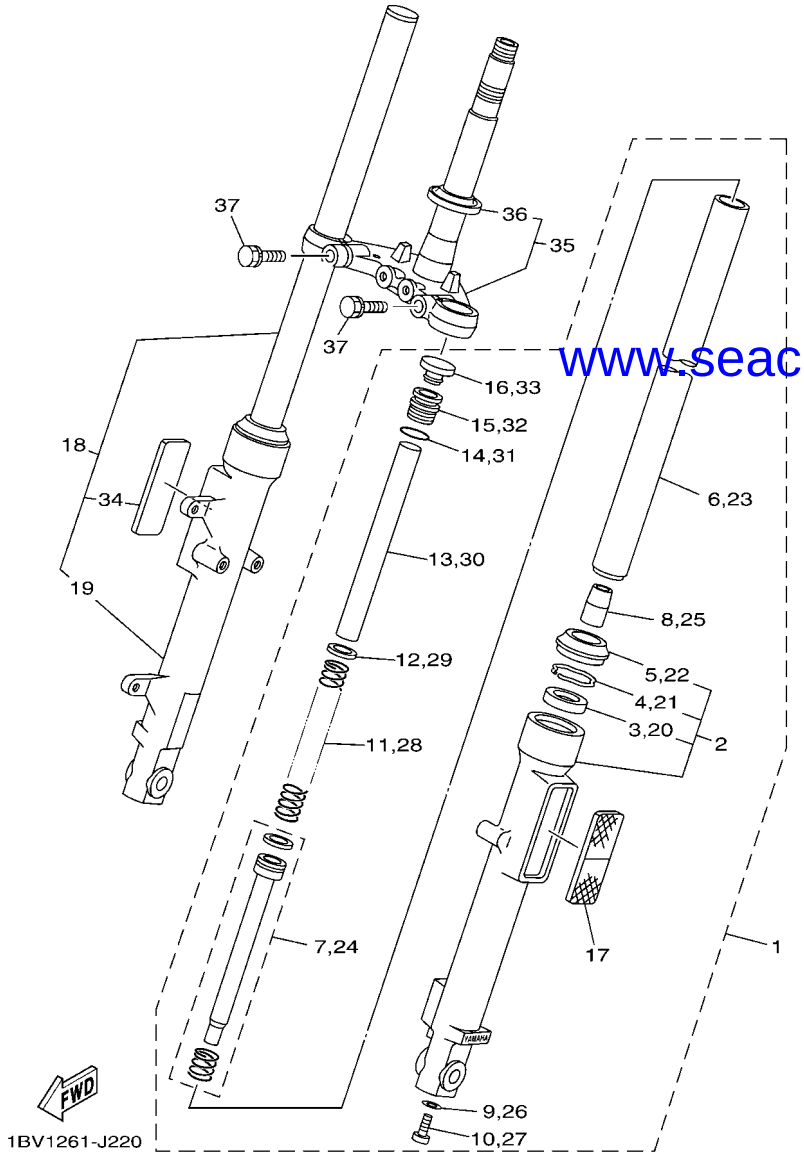

www.seacubemoto.com

FIG. 21 HORQUILLA DELANTERA — FRONT FORK

REF. Nº	CODIGO Nº PART NO.	DESCRIPCION DESCRIPTION	BH72					OBSERVACIONES REMARKS
28	5VL–F3141–40	.RESORTE HORQUILLA DELANT. .SPRING, FRONT FORK	1					
29	5AP–F3427–00	.ARANDELA .WASHER	1					
30	5HH–F3118–10	.SEPARADOR .SPACER	1					
31	5AP–F3147–00	.ARO .O-RING	1					
32	5VL–F3111–20	.PERNO DE TAPA .BOLT, CAP	1					
33	5VL–F3154–00	.TAPON TUBO INTERIOR .CAP	1					
34	5VL–H5110–40	.REFLECTOR COMPLETO .REFLECTOR ASSY	1					
35	5VL–F331X–01	MENSULA INFERIOR BRACKET, UNDER	1					
36	4FP–F3411–10	.PISTA DE BOLAS 1 .RACE, BALL 1	1					
37	5VL–F3346–10	PERNO 1 BOLT 1	2					

SEACUBE
ONE-STOP PARTS SOLUTION

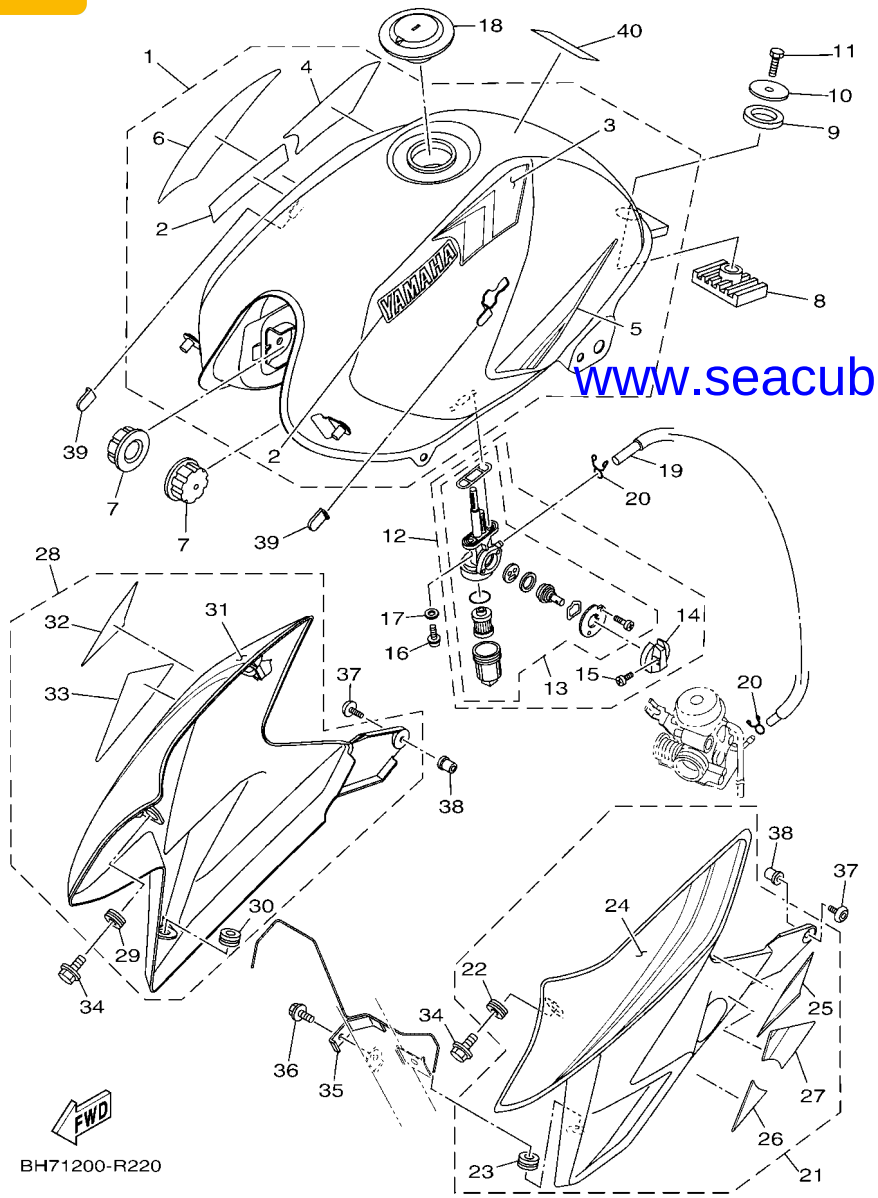

www.seacubemoto.com

FIG. 22 DEPOSITO DE COMBUSTIBLE — FUEL TANK

REF. Nº	CODIGO Nº PART NO.	DESCRIPCION DESCRIPTION	BH72					OBSERVACIONES REMARKS
1	BH7–W2411–00–P0	DEPOSITO DE COMBUSTIBLE COMP. FUEL TANK ASSY	1					UR PARA SMX UR FOR SMX
	BH7–W2411–00–P4	DEPOSITO DE COMBUSTIBLE COMP. FUEL TANK ASSY	1					UR PARA RM7 UR FOR RM7
	BH7–W2411–00–P5	DEPOSITO DE COMBUSTIBLE COMP. FUEL TANK ASSY	1					UR PARA BWC1 UR FOR BWC1
	BH7–W2411–00–P3	DEPOSITO DE COMBUSTIBLE COMP. FUEL TANK ASSY	1					UR PARA DOMC UR FOR DOMC
2	99226–00100	.EMBLEMA, YAMAHA .EMBLEM, YAMAHA	2					PARA SMX,RM7,DOMC FOR SMX,RM7,DOMC
	99227–00100	.EMBLEMA, YAMAHA .EMBLEM, YAMAHA	2					PARA BWC1 FOR BWC1
3	1BK–F4244–C0	.CALCOMANIA DEPOSITO COMBUST.1 .GRAPHIC, FUEL TANK 1	1					UR PARA SMX UR FOR SMX
	1BK–F4244–D0	.CALCOMANIA DEPOSITO COMBUST.1 .GRAPHIC, FUEL TANK 1	1					UR PARA RM7 UR FOR RM7
	1BK–F4244–E0	.CALCOMANIA DEPOSITO COMBUST.1 .GRAPHIC, FUEL TANK 1	1					UR PARA BWC1 UR FOR BWC1
	1BK–F4244–F0	.CALCOMANIA DEPOSITO COMBUST.1 .GRAPHIC, FUEL TANK 1	1					UR PARA DOMC UR FOR DOMC
4	1BK–F4245–C0	.CALCOMANIA DEPOSITO COMBUST.2 .GRAPHIC, FUEL TANK 2	1					UR PARA SMX UR FOR SMX
	1BK–F4245–D0	.CALCOMANIA DEPOSITO COMBUST.2 .GRAPHIC, FUEL TANK 2	1					UR PARA RM7 UR FOR RM7
	1BK–F4245–E0	.CALCOMANIA DEPOSITO COMBUST.2 .GRAPHIC, FUEL TANK 2	1					UR PARA BWC1 UR FOR BWC1
	1BK–F4245–F0	.CALCOMANIA DEPOSITO COMBUST.2 .GRAPHIC, FUEL TANK 2	1					UR PARA DOMC UR FOR DOMC
5	1BK–F4246–C0	.CALCOMANIA 3 .GRAPHIC 3	1					UR PARA SMX UR FOR SMX
	1BK–F4246–D0	.CALCOMANIA 3 .GRAPHIC 3	1					UR PARA RM7 UR FOR RM7
	1BK–F4246–E0	.CALCOMANIA 3 .GRAPHIC 3	1					UR PARA BWC1 UR FOR BWC1
	1BK–F4246–F0	.CALCOMANIA 3 .GRAPHIC 3	1					UR PARA DOMC UR FOR DOMC
6	1BK–F4247–C0	.CALCOMANIA DEP. .GRAPHIC	1					UR PARA SMX UR FOR SMX
	1BK–F4247–D0	.CALCOMANIA DEP. .GRAPHIC	1					UR PARA RM7 UR FOR RM7
	1BK–F4247–E0	.CALCOMANIA DEP. .GRAPHIC	1					UR PARA BWC1 UR FOR BWC1
	1BK–F4247–F0	.CALCOMANIA DEP. .GRAPHIC	1					UR PARA DOMC UR FOR DOMC
7	4FP–F4181–00	AMORTIGUADOR DE MONTAJE 1 DAMPER, LOCATING 1	2					
8	2MP–F4183–00	AMORTIGUADOR DE MONTAJE 3 DAMPER, LOCATING 3	1					
9	5VL–F4182–00	AMORTIGUADOR DE MONTAJE 2 DAMPER, LOCATING 2	1					
10	90201–088P2	ARANDELA PLANA WASHER, PLATE	1					
11	97002–08016	PERNO BOLT	1					

SEACUBE
ONE-STOP PARTS SOLUTION

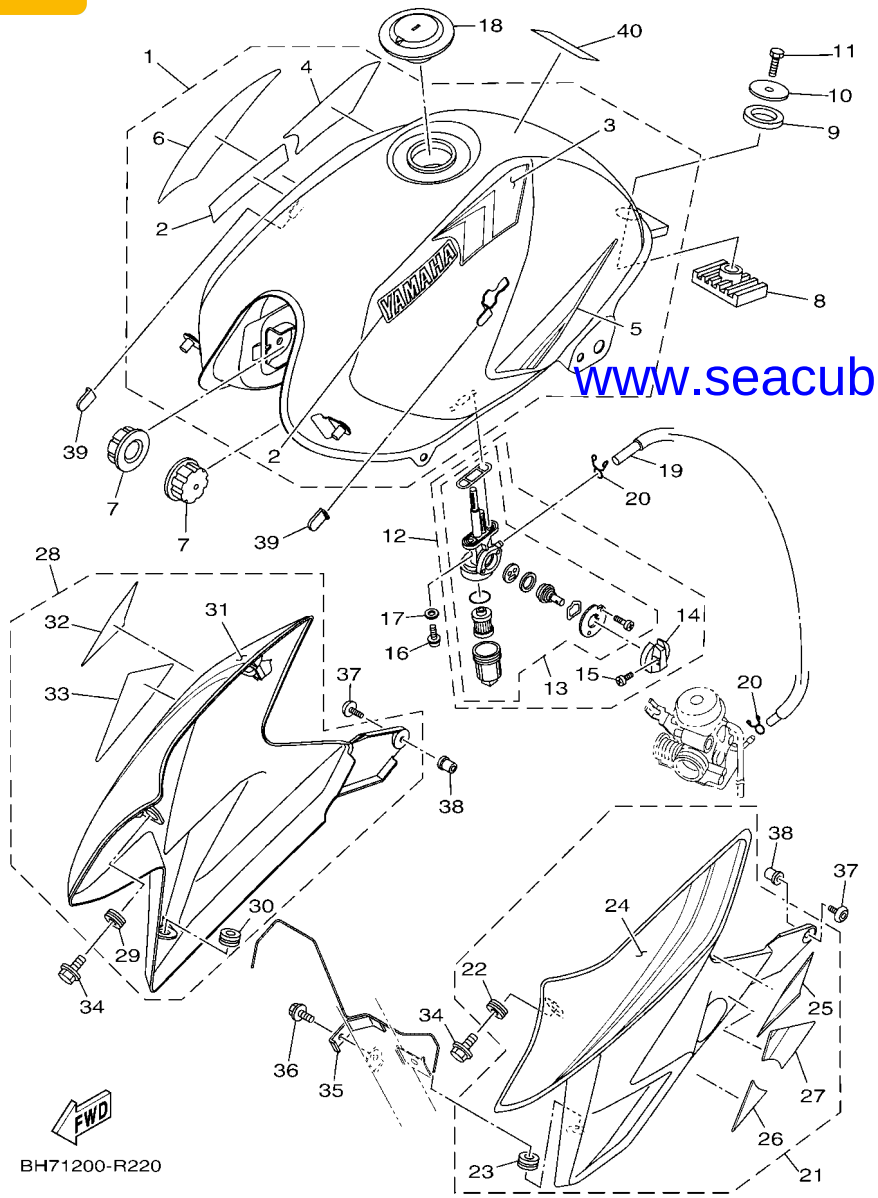

www.seacubemoto.com

FIG. 22 DEPOSITO DE COMBUSTIBLE — FUEL TANK

REF. Nº	CODIGO Nº PART NO.	DESCRIPCION DESCRIPTION	BH72					OBSERVACIONES REMARKS
12	13R–F4510–00	GRIFO DE COMBUSTIBLE 2 FUEL COCK ASSY 2	1					
13	5VL–F4500–01	.GRIFO DE COMBUSTIBLE 1 .FUEL COCK ASSY 1	1					
14	5VL–F4524–01	.LLAVE DEL GRIFO .LEVER, COCK	1					
15	90157–03800	.TORNILLO CABEZA CONICA PLANA .SCREW, PAN HEAD	1					
16	90159–06820	TORNILLO CON VALONA SCREW, WITH WASHER	2					
17	90430–05800	JUNTA GASKET	2					
18	5VL–F4610–12	TAPA COMPLETA CAP ASSY	1					
19	4P2–F4311–00	TUBO DE COMBUSTIBLE 1 PIPE, FUEL 1	1					
20	90467–09054	PRESILLA CLIP	2					
21	1BK–W137W–00–P0	CUBIERTA DE GUIA DE AIRE 1 SCOOP, AIR 1	1					UR PARA SMX UR FOR SMX
	1BK–W137W–02–P0	CUBIERTA DE GUIA DE AIRE 1 SCOOP, AIR 1	1					UR PARA RM7 UR FOR RM7
	1BK–W137W–00–P1	CUBIERTA DE GUIA DE AIRE 1 SCOOP, AIR 1	1					UR PARA BWC1 UR FOR BWC1
	1BK–W137W–02–P1	CUBIERTA DE GUIA DE AIRE 1 SCOOP, AIR 1	1					UR PARA DOMC UR FOR DOMC
22	90480–15878	.TAPON .GROMMET	1					
23	90480–12835	.TAPON .GROMMET	1					
24	1BK–F424A–10	.GRAFICO 7 .GRAPHIC 7	1					UR PARA SMX UR FOR SMX
	1BK–F424A–20	.GRAFICO 7 .GRAPHIC 7	1					UR PARA RM7 UR FOR RM7
	1BK–F424A–30	.GRAFICO 7 .GRAPHIC 7	1					UR PARA BWC1 UR FOR BWC1
	1BK–F424A–40	.GRAFICO 7 .GRAPHIC 7	1					UR PARA DOMC UR FOR DOMC
25	1BK–F4254–10	.CALCOMANIA DEP. COMBUSTIBLE 7 .GRAPHIC, FUEL TANK 7	1					UR PARA SMX UR FOR SMX
	1BK–F4254–20	.CALCOMANIA DEP. COMBUSTIBLE 7 .GRAPHIC, FUEL TANK 7	1					UR PARA RM7 UR FOR RM7
	1BK–F4254–30	.CALCOMANIA DEP. COMBUSTIBLE 7 .GRAPHIC, FUEL TANK 7	1					UR PARA BWC1 UR FOR BWC1
	1BK–F4254–40	.CALCOMANIA DEP. COMBUSTIBLE 7 .GRAPHIC, FUEL TANK 7	1					UR PARA DOMC UR FOR DOMC
26	1BK–F4256–10	.CALCOMANIA DEP. COMBUSTIBLE 9 .GRAPHIC, FUEL TANK 9	1					UR PARA SMX UR FOR SMX
	1BK–F4256–20	.CALCOMANIA DEP. COMBUSTIBLE 9 .GRAPHIC, FUEL TANK 9	1					UR PARA RM7 UR FOR RM7
	1BK–F4256–30	.CALCOMANIA DEP. COMBUSTIBLE 9 .GRAPHIC, FUEL TANK 9	1					UR PARA BWC1 UR FOR BWC1
	1BK–F4256–40	.CALCOMANIA DEP. COMBUSTIBLE 9 .GRAPHIC, FUEL TANK 9	1					UR PARA DOMC UR FOR DOMC

SEACUBE
ONE-STOP PARTS SOLUTION

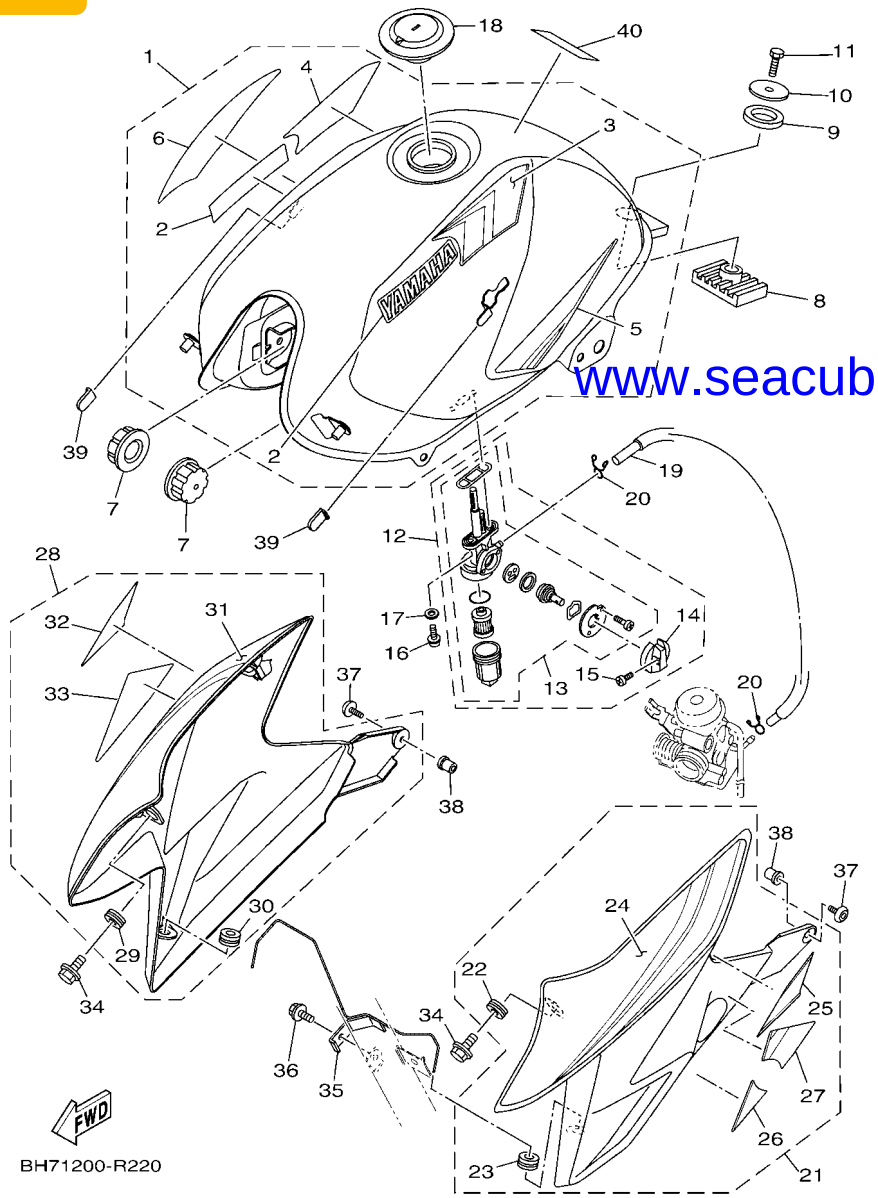

www.seacubemoto.com

FIG. 22 DEPOSITO DE COMBUSTIBLE — FUEL TANK

REF. Nº	CODIGO Nº PART NO.	DESCRIPCION DESCRIPTION	BH72					OBSERVACIONES REMARKS
27	1BK–F4258–10	.CALCOMANIA DEP. COMBUSTIBLE11 .GRAPHIC, FUEL TANK 11	1					UR PARA SMX UR FOR SMX
	1BK–F4258–20	.CALCOMANIA DEP. COMBUSTIBLE11 .GRAPHIC, FUEL TANK 11	1					UR PARA RM7 UR FOR RM7
	1BK–F4258–30	.CALCOMANIA DEP. COMBUSTIBLE11 .GRAPHIC, FUEL TANK 11	1					UR PARA BWC1 UR FOR BWC1
	1BK–F4258–40	.CALCOMANIA DEP. COMBUSTIBLE11 .GRAPHIC, FUEL TANK 11	1					UR PARA DOMC UR FOR DOMC
28	1BK–W137X–01–P0	CUBIERTA DE GUIA DE AIRE 2 SCOOP, AIR 2	1					UR PARA SMX UR FOR SMX
	1BK–W137X–03–P0	CUBIERTA DE GUIA DE AIRE 2 SCOOP, AIR 2	1					UR PARA RM7 UR FOR RM7
	1BK–W137X–01–P1	CUBIERTA DE GUIA DE AIRE 2 SCOOP, AIR 2	1					UR PARA BWC1 UR FOR BWC1
	1BK–W137X–03–P1	CUBIERTA DE GUIA DE AIRE 2 SCOOP, AIR 2	1					UR PARA DOMC UR FOR DOMC
29	90480–15878	.TAPON .GROMMET	1					
30	90480–12835	.TAPON .GROMMET	1					
31	1BK–F424B–10	.CALCOMANIA .GRAPHIC 8	1					UR PARA SMX UR FOR SMX
	1BK–F424B–20	.CALCOMANIA .GRAPHIC 8	1					UR PARA RM7 UR FOR RM7
	1BK–F424B–30	.CALCOMANIA .GRAPHIC 8	1					UR PARA BWC1 UR FOR BWC1
	1BK–F424B–40	.CALCOMANIA .GRAPHIC 8	1					UR PARA DOMC UR FOR DOMC
32	1BK–F4255–10	.CALCOMANIA DEP. COMBUSTIBLE 8 .GRAPHIC, FUEL TANK 8	1					UR PARA SMX UR FOR SMX
	1BK–F4255–20	.CALCOMANIA DEP. COMBUSTIBLE 8 .GRAPHIC, FUEL TANK 8	1					UR PARA RM7 UR FOR RM7
	1BK–F4255–30	.CALCOMANIA DEP. COMBUSTIBLE 8 .GRAPHIC, FUEL TANK 8	1					UR PARA BWC1 UR FOR BWC1
	1BK–F4255–40	.CALCOMANIA DEP. COMBUSTIBLE 8 .GRAPHIC, FUEL TANK 8	1					UR PARA DOMC UR FOR DOMC
33	1BK–F4257–10	.CALCOMANIA DEP. COMBUSTIBLE10 .GRAPHIC, FUEL TANK 10	1					UR PARA SMX UR FOR SMX
	1BK–F4257–20	.CALCOMANIA DEP. COMBUSTIBLE10 .GRAPHIC, FUEL TANK 10	1					UR PARA RM7 UR FOR RM7
	1BK–F4257–30	.CALCOMANIA DEP. COMBUSTIBLE10 .GRAPHIC, FUEL TANK 10	1					UR PARA BWC1 UR FOR BWC1
	1BK–F4257–40	.CALCOMANIA DEP. COMBUSTIBLE10 .GRAPHIC, FUEL TANK 10	1					UR PARA DOMC UR FOR DOMC
34	95802–06012	TORNILLO DE REBORDE BOLT, FLANGE	2					
35	1BK–F4216–00	SOPORTE STAY	1					
36	95802–06010	TORNILLO DE REBORDE BOLT, FLANGE	1					
37	90111–05803	TORNILLO BOLT,HEX. SOCKET BUTTON	2					
38	90179–05523	TUERCA NUT	2					

SEACUBE
ONE-STOP PARTS SOLUTION

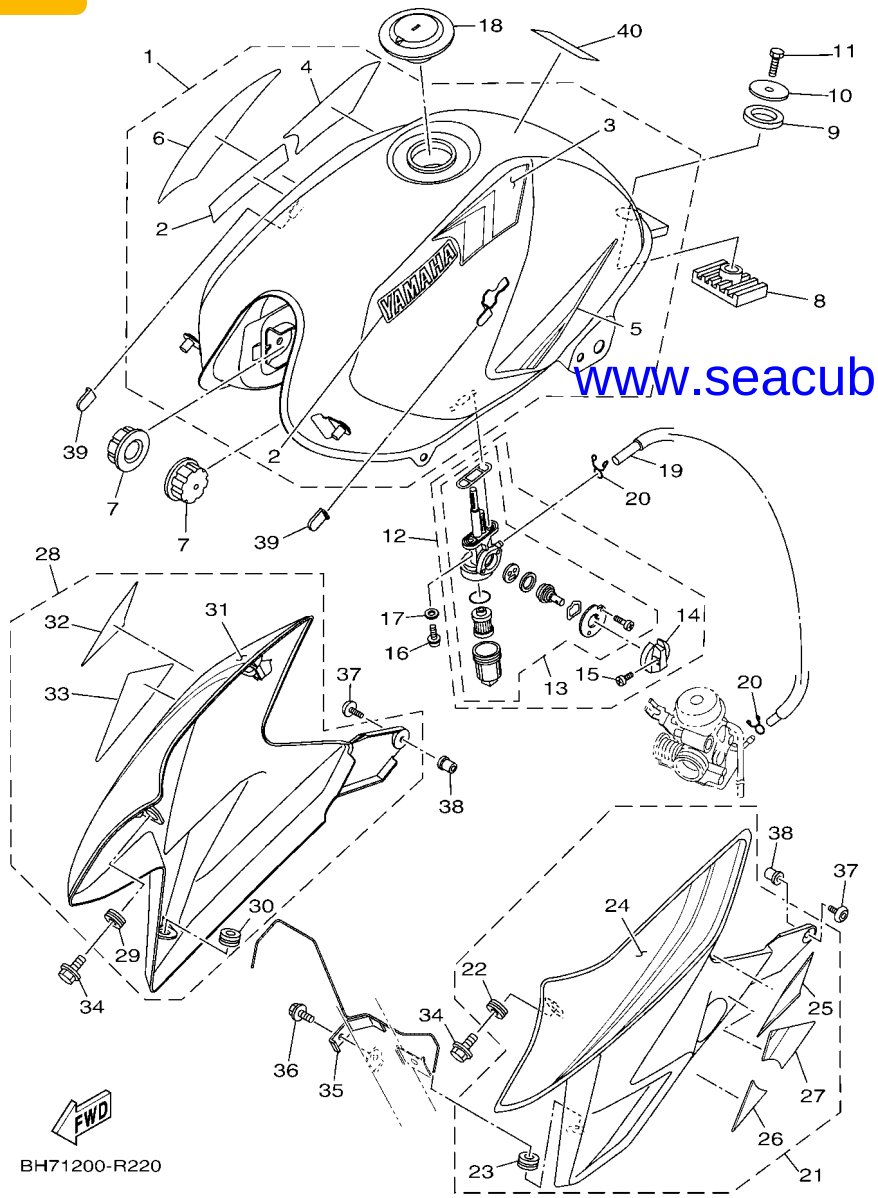

www.seacubemoto.com

FIG. 22 DEPOSITO DE COMBUSTIBLE — FUEL TANK

REF. Nº	CODIGO Nº PART NO.	DESCRIPCION DESCRIPTION	BH72					OBSERVACIONES REMARKS
39	12B–F411J–00	AMORTIGUADOR, DE CUBIERTA LAT DAMPER, SIDE COVER	2					
40	5PA–21568–01	ETIQUETA DE PRECAUCION LABEL, WARNING	1					

SEACUBE
ONE-STOP PARTS SOLUTION

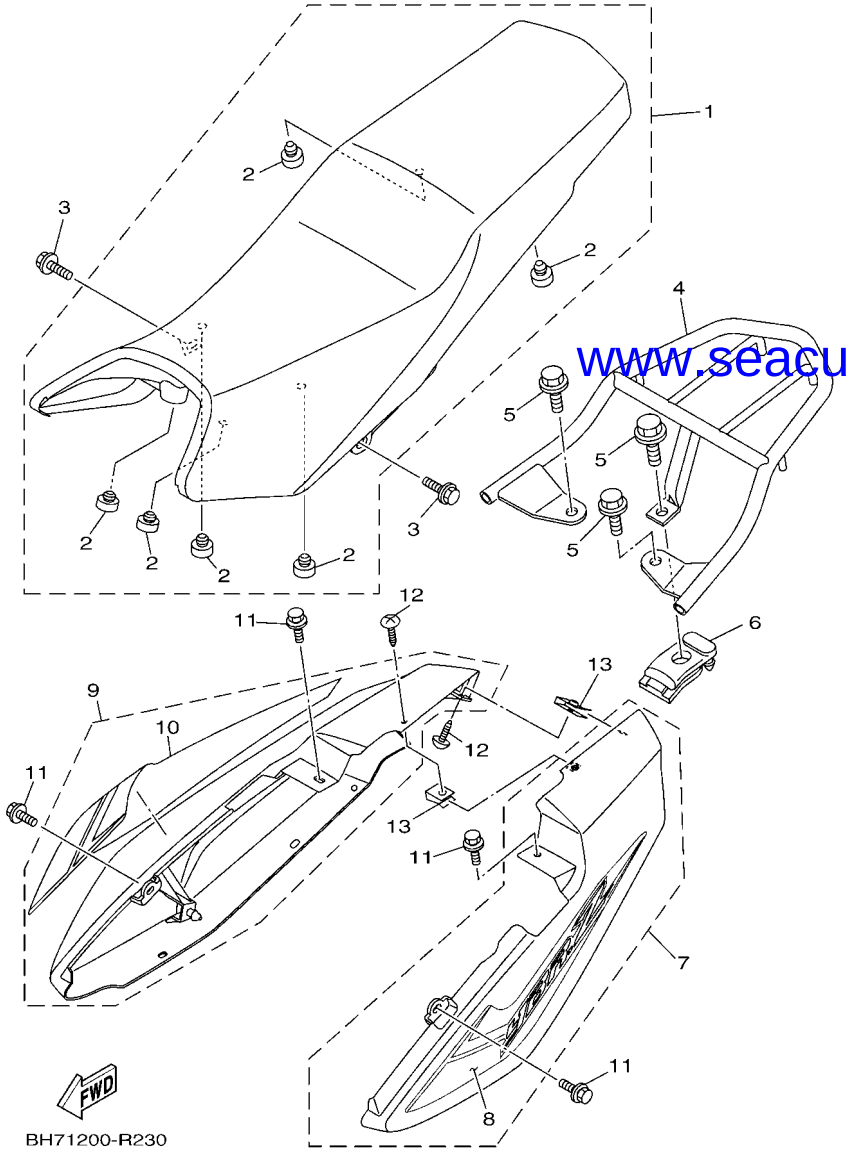

www.seacubemoto.com

FIG. 23 ASIENTO — SEAT

REF. Nº	CODIGO Nº PART NO.	DESCRIPCION DESCRIPTION	BH72					OBSERVACIONES REMARKS
1	1BK–F4730–10	SILLIN DOBLE COMPLETO DOUBLE SEAT ASSY	1					
2	4TU–F4741–00	.COJIN DE ASIENTO .PAD, SEAT	6					
3	90119–06869	TORNILLO CON ARANDELA BOLT, WITH WASHER	2					
4	1BK–F4840–20	PORTADOR COMPLETO CARRIER ASSY	1					
5	95812–08016	TORNILLO DE REBORDE BOLT, FLANGE	3					
6	1BK–F4796–00	CUBIERTA COVER	1					
7	1BK–W471K–11–P4	LENTE DE COLA COPLETO 1 TAIL COVER ASSY 1	1					UR PARA SMX UR FOR SMX
	1BK–W471K–11–P5	LENTE DE COLA COPLETO 1 TAIL COVER ASSY 1	1					UR PARA RM7 UR FOR RM7
	1BK–W471K–11–P7	LENTE DE COLA COPLETO 1 TAIL COVER ASSY 1	1					UR PARA BWC1 UR FOR BWC1
	1BK–W471K–11–P6	LENTE DE COLA COPLETO 1 TAIL COVER ASSY 1	1					UR PARA DOMC UR FOR DOMC
8	BH7–F477M–50	.GRAFICO, CUBIERTA TRASERA .GRAPHIC SET, TAIL COVER	1					UR PARA SMX UR FOR SMX
	BH7–F477M–60	.GRAFICO, CUBIERTA TRASERA .GRAPHIC SET, TAIL COVER	1					UR PARA RM7 UR FOR RM7
	BH7–F477M–70	.GRAFICO, CUBIERTA TRASERA .GRAPHIC SET, TAIL COVER	1					UR PARA BWC1 UR FOR BWC1
	BH7–F477M–80	.GRAFICO, CUBIERTA TRASERA .GRAPHIC SET, TAIL COVER	1					UR PARA DOMC UR FOR DOMC
9	1BK–W472K–11–P4	LENTE DE COLA COPLETO 2 TAIL COVER ASSY 2	1					UR PARA SMX UR FOR SMX
	1BK–W472K–11–P5	LENTE DE COLA COPLETO 2 TAIL COVER ASSY 2	1					UR PARA RM7 UR FOR RM7
	1BK–W472K–11–P7	LENTE DE COLA COPLETO 2 TAIL COVER ASSY 2	1					UR PARA BWC1 UR FOR BWC1
	1BK–W472K–11–P6	LENTE DE COLA COPLETO 2 TAIL COVER ASSY 2	1					UR PARA DOMC UR FOR DOMC
10	BH7–F477N–50	.GRAFICO, CUBIERTA TRASERA 2 .GRAPHIC SET, TAIL COVER 2	1					UR PARA SMX UR FOR SMX
	BH7–F477N–60	.GRAFICO, CUBIERTA TRASERA 2 .GRAPHIC SET, TAIL COVER 2	1					UR PARA RM7 UR FOR RM7
	BH7–F477N–70	.GRAFICO, CUBIERTA TRASERA 2 .GRAPHIC SET, TAIL COVER 2	1					UR PARA BWC1 UR FOR BWC1
	BH7–F477N–80	.GRAFICO, CUBIERTA TRASERA 2 .GRAPHIC SET, TAIL COVER 2	1					UR PARA DOMC UR FOR DOMC
11	90119–06869	TORNILLO CON ARANDELA BOLT, WITH WASHER	4					
12	97702–50012	TORNILLO ROSCA HEMBRA SCREW, TAPPING	8					
13	90183–05807	TUERCA DE RESORTE NUT, SPRING	2					

SEACUBE
ONE-STOP PARTS SOLUTION

FIG. 24 RUEDA DELANTERA — FRONT WHEEL

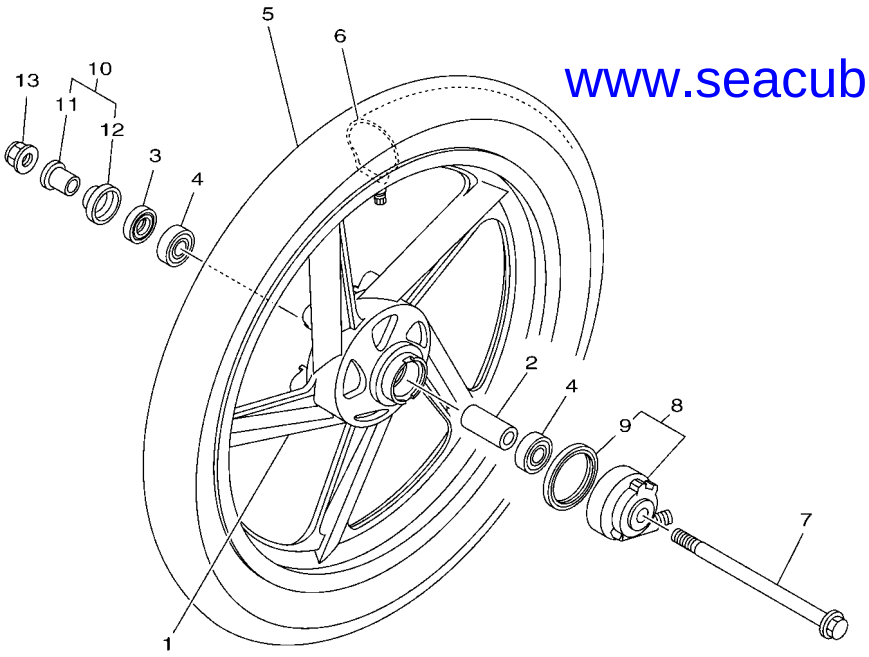

www.seacubemoto.com

REF. Nº	CODIGO Nº PART NO.	DESCRIPCION DESCRIPTION	BH72					OBSERVACIONES REMARKS
1	1BK–F5168–10–33	RUEDA FUNDIDA DELANTERA CAST WHEEL, FRONT	1					YB YB
2	90560–15293	SEPARADOR SPACER	1					
3	93102–20857	SELLO ACEITE OIL SEAL	1					
4	93306–202Y4	COJINETE BEARING	2					
5	94127–18865	NEUMATICO(2.75-18 S901 4PR TT) TIRE (2.75-18 S901 4PR TT)	1					CHENG SHIN CHENG SHIN
6	94227–18825	TUBO (2.75-18) TUBE (2.75-18)	1					CHENG SHIN CHENG SHIN
7	5VL–F5181–11	EJE DE LA RUEDA AXLE, WHEEL	1					
8	4GU–F5190–12	UNIDAD DE ENGRANAJE COMPLETA GEAR UNIT ASSY	1					
9	93105–47808	.SELLO ACEITE .OIL SEAL	1					
10	2MP–F511X–00	COLLAR COLLAR	1					
11	90387–15831	.ESPACIADOR .COLLAR	1					
12	4GU–F5118–00	.CUBIERTA DE MASA PARA POLVO .COVER, HUB DUST	1					
13	95602–14200	TUERCA DE AUTO-CIERRE NUT, SELF-LOCKING	1					

SEACUBE
ONE-STOP PARTS SOLUTION

FIG. 25 CALIBRE FRENO DELANTERA — FRONT BRAKE CALIPER

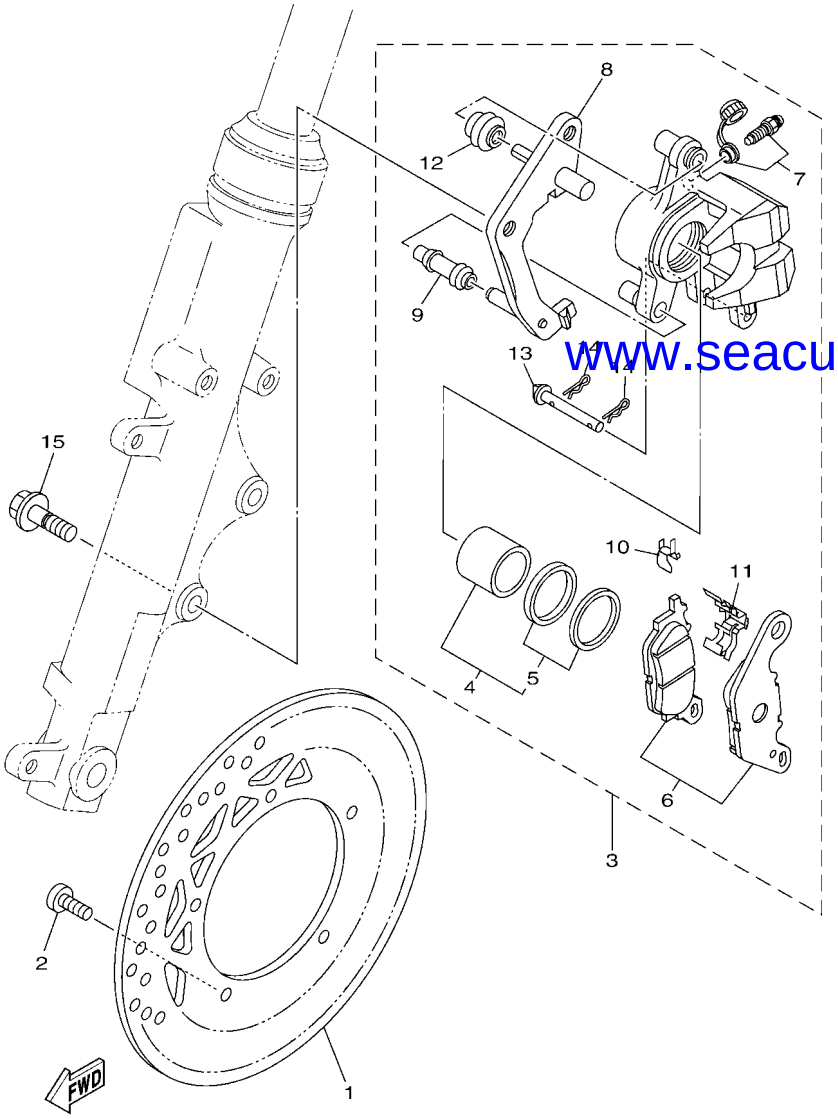

2MP1415-N290

www.seacubemoto.com

REF. Nº	CODIGO Nº PART NO.	DESCRIPCION DESCRIPTION	BH72					OBSERVACIONES REMARKS
1	3D9–F582U–10	DISCO DE FRENO (DERECHO) DISK, BRAKE (RIGHT)	1					
2	90111–08805	TORNILLO BOLT,HEX. SOCKET BUTTON	5					
3	2MP–F580U–00	CALIBRE COMPLETO (DERECHO) CALIPER ASSY (RIGHT)	1					
4	2MP–W0057–00	.PISTON COMPLETO PINZA .PISTON ASSY, CALIPER	1					
5	2MP–W0047–00	..JUEGO DE RETENES DE PINZA ..CALIPER SEAL KIT	1					
6	2MP–W0045–00	.JUEGO DE COJIN DE FRENO .BRAKE PAD KIT	1					
7	4S5–W0048–01	.CJTO TORNILLO DE PURGA .BLEED SCREW KIT	1					
8	4S5–F5921–01	.MENSULA DE SOPORTE .BRACKET, SUPPORT	1					
9	4S5–F5937–00	.FUNDA .BOOT 2	1					
10	4S5–F5939–00	.PRESILLA .CLIP, PAD	1					
11	4S5–F5919–00	.SOPORTE DE PASTILLAS .SUPPORT, PAD	1					
12	4S5–F5917–00	.FUNDA DE CALIBRE .BOOT, CALIPER	1					
13	4S5–F5924–01	.PASADOR .PIN, PAD	1					
14	4S5–F5925–00	.PRESILLA .CLIP	2					
15	90105–10831	TORNILLO BOLT, FLANGE	2					

SEACUBE
ONE-STOP PARTS SOLUTION

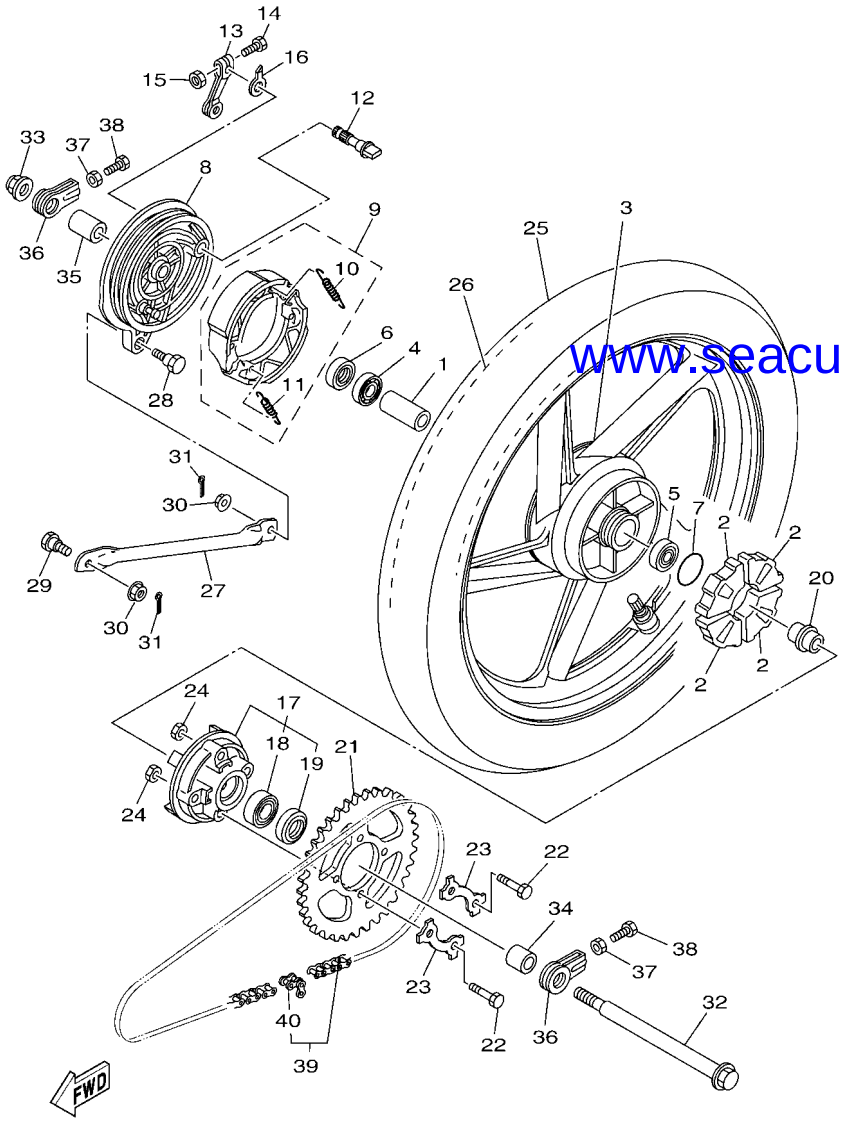

1BR2262-P270

www.seacubemoto.com

FIG. 26 RUEDA TRASERA — REAR WHEEL

REF. Nº	CODIGO Nº PART NO.	DESCRIPCION DESCRIPTION	BH72					OBSERVACIONES REMARKS
1	90387–15809	ESPACIADOR COLLAR	1					
2	1KL–F5364–00	AMORTIGUADOR DAMPER	4					
3	1BK–F5338–00–33	RUEDA FUNDIDA TRASERA CAST WHEEL, REAR	1					YB YB
4	93306–202Y4	COJINETE BEARING	1					
5	93306–252X5	COJINETE BEARING	1					
6	93104–22802	SELLO ACEITE OIL SEAL	1					
7	93210–42807	ANILLO O O-RING	1					
8	5VL–F5321–01–33	PLACA DE ZAPATA DE FRENO PLATE, BRAKE SHOE	1					YB YB
9	3D9–W2533–00	JUEGO DE ZAPATA DE FRENO BRAKE SHOE KIT	1					
10	90506–12801	.RESORTE DE TENSION .SPRING, TENSION	1					
11	90506–15802	.RESORTE DE TENSION .SPRING, TENSION	1					
12	4GU–F5351–02	ARBOL DE LEVAS CAMSHAFT	1					
13	5VL–F5355–01	PALANCA DE ARBOL DE LEVAS LEVER, CAMSHAFT	1					
14	90101–06848	TORNILLO BOLT	1					
15	95302–06600	TUERCA NUT, HEXAGON	1					
16	4GU–F533A–01	PLACA INDICADOR PLATE, INDICATOR	1					
17	5VL–Y2536–00	EMBRAGUE DE MASA COMPLETO CLUTCH, HUB ASSY	1					
18	93306–054X3	.COJINETE .BEARING	1					
19	93106–26804	.SELLO ACEITE .OIL SEAL	1					
20	5VL–F5387–01	EJE DE CORONA AXLE, SPROCKET	1					
21	5VL–F5445–01	CORONA (45T) SPROCKET, DRIVEN (45T)	1					
22	90109–08864	PERNO BOLT	4					
23	5LK–F5412–01	ARANDELA WASHER	2					
24	90179–08639	TUERCA NUT	4					
25	94109–18826	NEUMATICO (90/90-18 S180K 57P) TIRE (90/90-18 S180K 57P TT)	1					CHENG SHIN CHENG SHIN
26	94227–18825	TUBO (2.75-18) TUBE (2.75-18)	1					CHENG SHIN CHENG SHIN
27	5VL–F5371–00	BARRA TENSORA BAR, TENSION	1					

SEACUBE
ONE-STOP PARTS SOLUTION

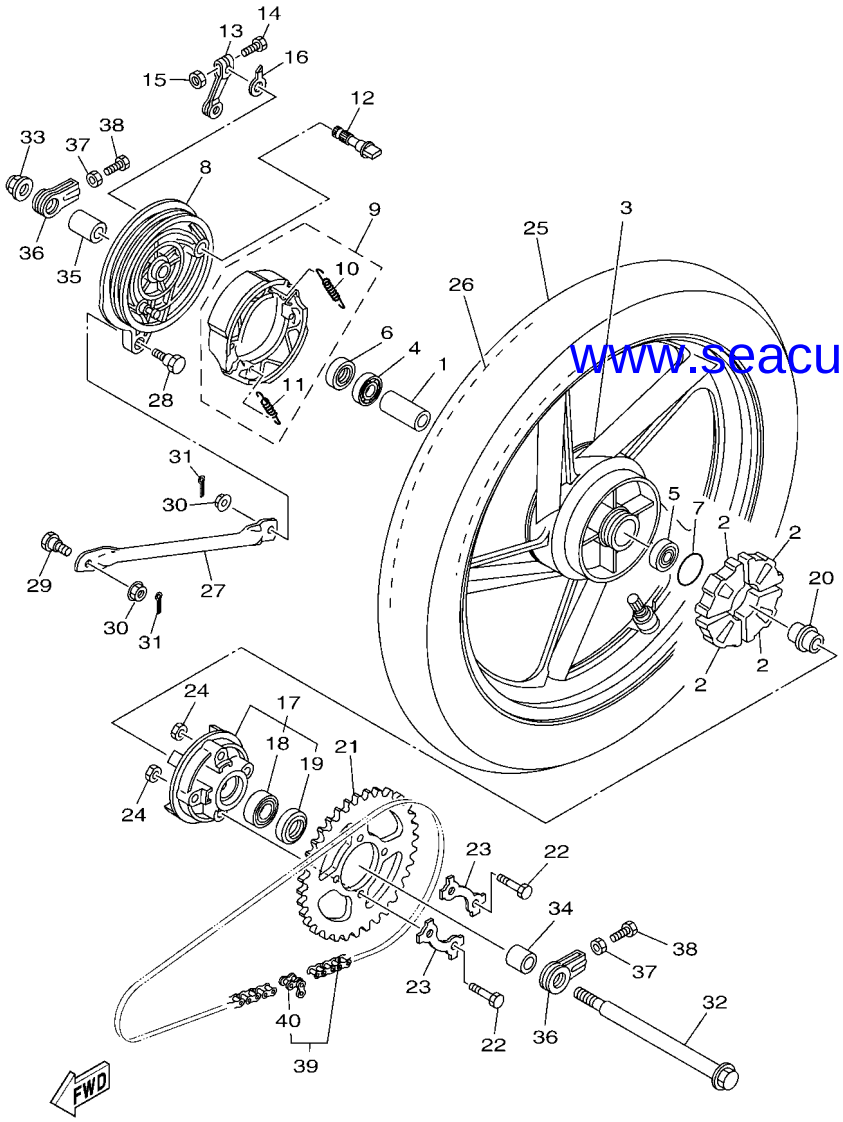

1BR2262-P270

www.seacubemoto.com

FIG. 26 RUEDA TRASERA — REAR WHEEL

REF. Nº	CODIGO Nº PART NO.	DESCRIPCION DESCRIPTION	BH72					OBSERVACIONES REMARKS
28	90109–08847	PERNO BOLT	1					
29	90109–08848	PERNO BOLT	1					
30	95702–08500	TUERCA DE BRIDA NUT, FLANGE	2					
31	91402–20012	CHAVETA PIN, COTTER	2					
32	5VL–F5381–01	EJE DE RUEDA AXLE, WHEEL	1					
33	95602–14200	TUERCA DE AUTO-CIERRE NUT, SELF-LOCKING	1					
34	5VL–F5386–01	COLLAR EJE DE RUEDA DENTADA COLLAR, SPROCKET AXLE	1					
35	90387–15832	ESPACIADOR COLLAR	1					
36	5VL–F5388–01	TIRADOR DE CADENA 1 PULLER, CHAIN 1	2					
37	95312–08600	TUERCA HEXAGONAL NUT	2					
38	90153–08804	TORNILLO HEXAGONAL SCREW, HEXAGON	2					
39	5VL–F53C0–10	CADENA (DID428H 118L) CHAIN (DID428H 118L)	1					
40	94668–E2001	.CONECTOR DE CADENA (DID 428H) .JOINT, CHAIN (DID 428H)	1					

SEACUBE
ONE-STOP PARTS SOLUTION

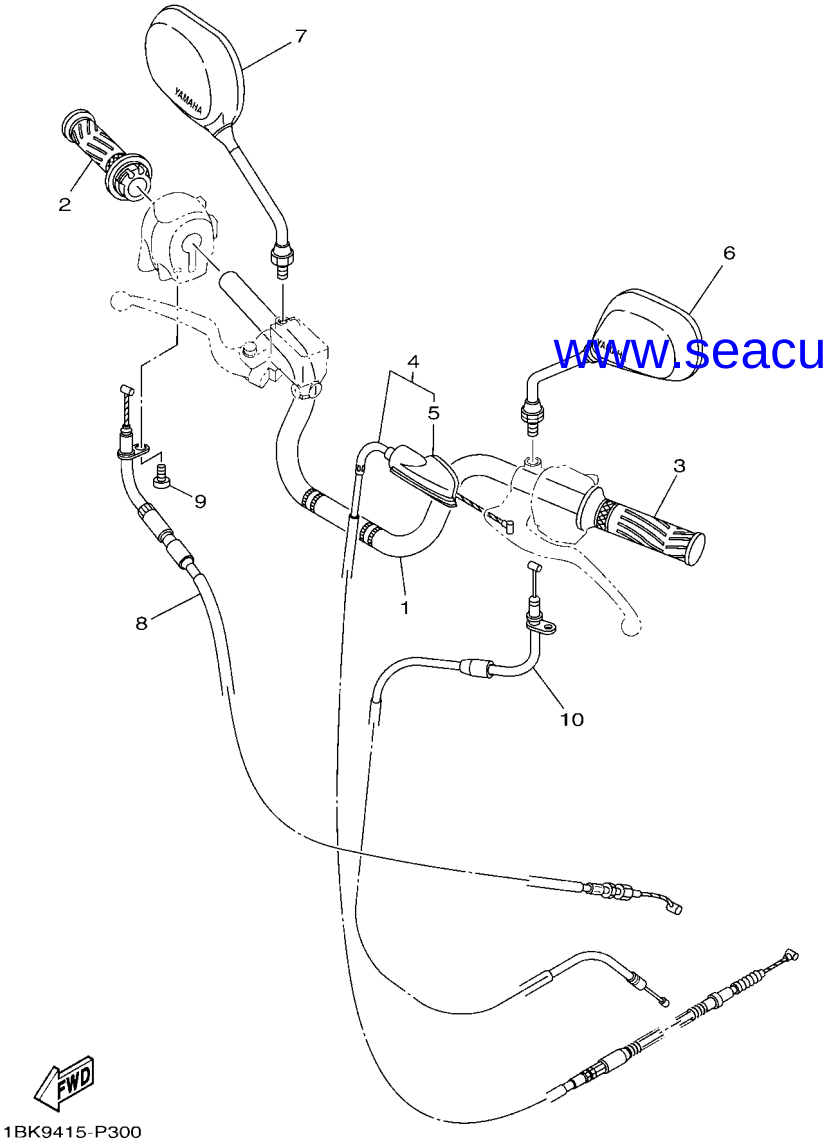

FIG. 27 MANILLAR & CABLE — STEERING HANDLE & CABLE

REF. Nº	CODIGO Nº PART NO.	DESCRIPCION DESCRIPTION	BH72					OBSERVACIONES REMARKS
1	1BK–F6111–00	MANUBRIO HANDLEBAR	1					
2	5VL–F6240–00	EMPUNADURA COMPLETA GRIP ASSY	1					
3	5VL–F6241–00	EMPUNADURA GRIP	1					
4	5VL–F6335–11	CABLE DE EMBRAGUE CABLE, CLUTCH	1					
5	5VL–F6372–01	.CUBIERTA DE PALANCA DE MANUB 1 .COVER, HANDLE LEVER 1	1					
6	13R–F6280–01	ESPEJO COMPLETO (IZQUIERDO) REAR VIEW MIRROR ASSY (LEFT)	1					
7	13R–F6290–01	ESPEJO COMPLETO (DERECHO) REAR VIEW MIRROR ASSY (RIGHT)	1					
8	4P2–F6311–10	CABLE DE ACELERADOR 1 CABLE, THROTTLE 1	1					
9	95502–05014	TORNILLO SCREW, PAN HEAD	1					
10	BH7–F6331–00	CABLE DE ARRANQUE CABLE, STARTER 1	1					

www.seacubemoto.com

SEACUBE
ONE-STOP PARTS SOLUTION

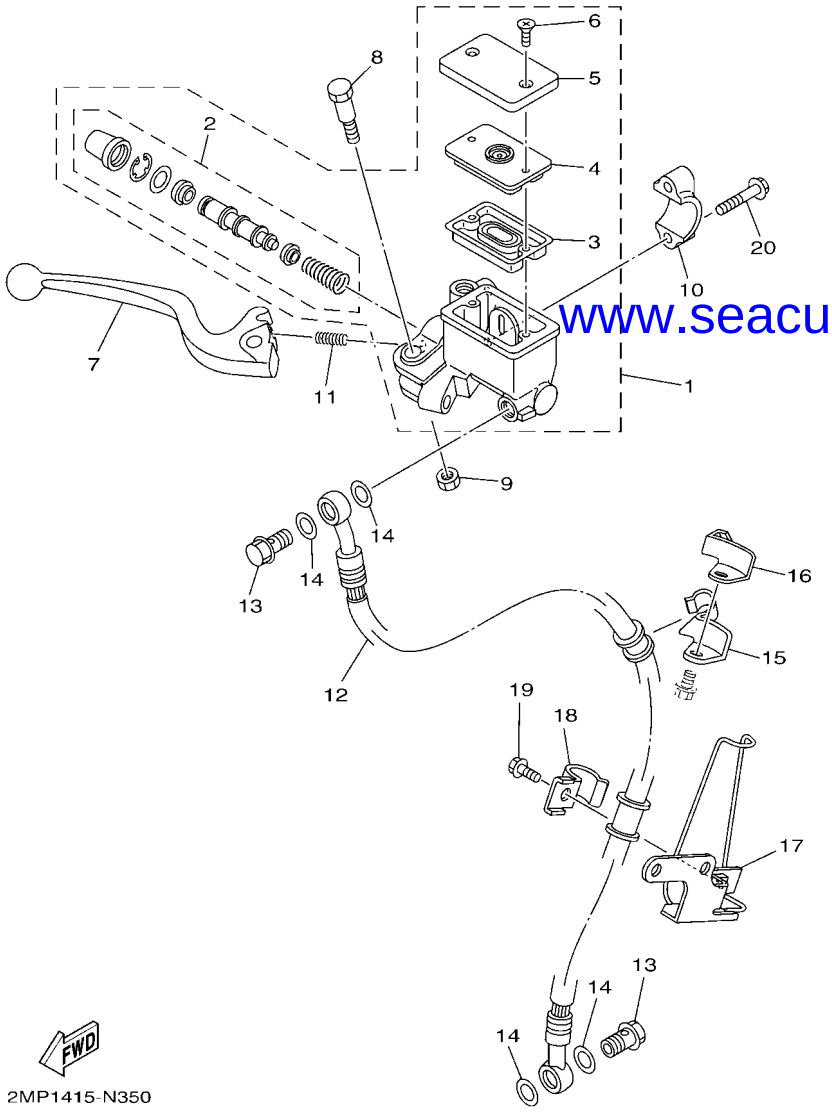

www.seacubemoto.com

FIG. 28 CILINDRO MAESTRO DELANTERO — FRONT MASTER CYLINDER

REF. Nº	CODIGO Nº PART NO.	DESCRIPCION DESCRIPTION	BH72					OBSERVACIONES REMARKS
1	2MP–W583T–00	CILINDRO MAESTRO COMPLETO MASTER CYLINDER ASSY	1					
2	2MP–W0041–00	.JUEGO DE CILINDRO MAESTRO .CYLINDER KIT, MASTER	1					
3	4KL–F5854–00	.EMPAQUE,DIAFRAGMA .DIAPHRAGM, RESERVOIR	1					
4	4KL–F585B–00	.PLACA, DIAFRAGMA .PLATE, DIAPHRAGM	1					
5	2MP–F5852–00	.TAPA DE TANQUE DE RESERVA .CAP, RESERVOIR	1					
6	2MP–F589H–00	.TORNILLO .SCREW	2					
7	5VL–H3922–22	PALANCA 2 LEVER 2	1					
8	3D9–F589F–01	PERNO DE PALANCA BOLT, LEVER	1					
9	3D9–F586F–01	TUERCA AUTOBLOCANTE NUT, U	1					
10	5VL–F5867–00	SOPORTE DE CILINDRO MAESTRO BRACKET, MASTER CYLINDER	1					
11	3D9–F5865–01	RESORTE DE ASIENTO SPRING, LEVER	1					
12	3D9–F5872–11	MANGUERA DE FRENO 1 HOSE, BRAKE 1	1					
13	90401–10811	PERNO DE UNION BOLT, UNION	2					
14	90201–108J9	ARANDELA PLANA WASHER, PLATE	4					
15	1BK–F5887–00	SOPORTE DE MANGUERA FRENO HOLDER, BRAKE HOSE	1					
16	5VL–F5886–00	SOPORTE DE MANGUERA FRENO HOLDER, BRAKE HOSE	1					
17	5VL–F5875–01	SOPORTE DE MANGUERA FRENO 1 HOLDER, BRAKE HOSE 1	1					
18	5VL–F5876–00	SOPORTE DE MANGUERA FRENO 2 HOLDER, BRAKE HOSE 2	1					
19	95022–06016	PERNO, DE BRIDA BOLT, FLANGE	1					
20	95022–06025	PERNO, DE BRIDA BOLT, FLANGE	2					

SEACUBE
ONE-STOP PARTS SOLUTION

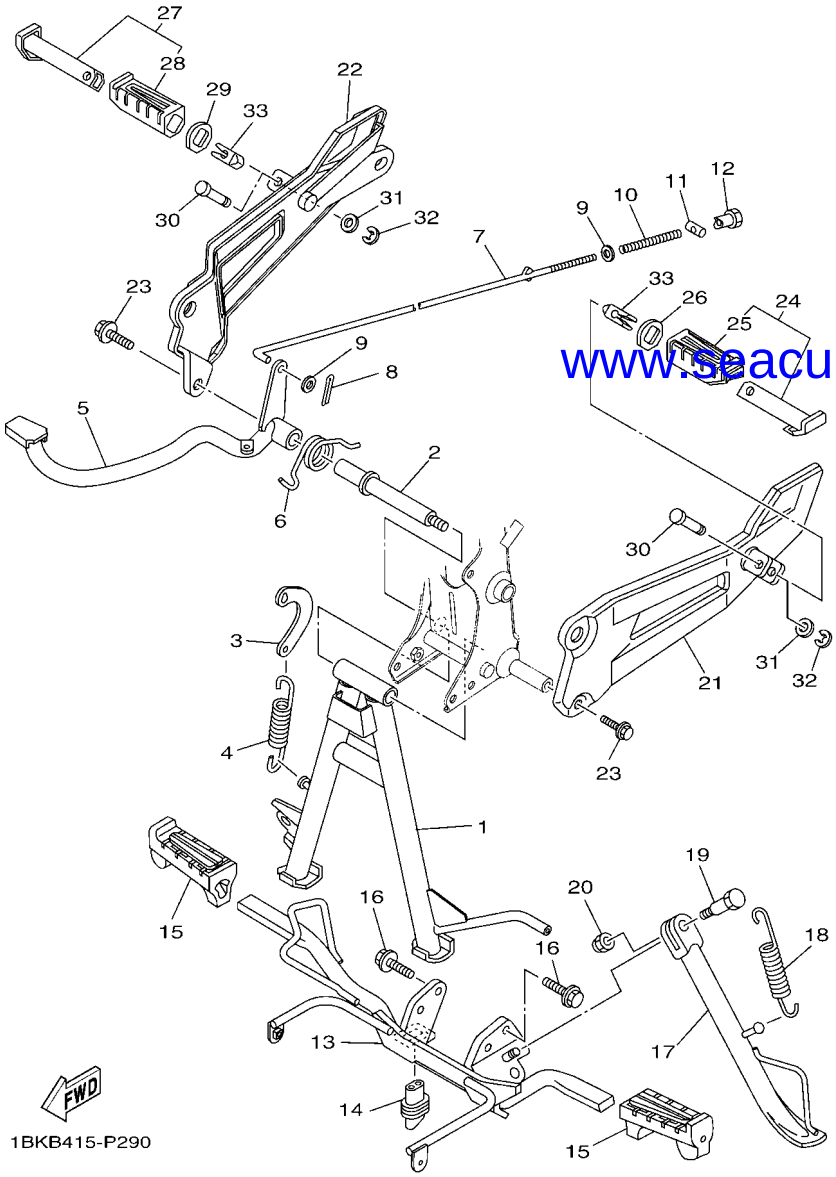

www.seacubemoto.com

FIG. 29 SOPORTE & APOYAPIE — STAND & FOOTREST

REF. Nº	CODIGO Nº PART NO.	DESCRIPCION DESCRIPTION	BH72					OBSERVACIONES REMARKS
1	1BK–F7111–00	PUNTAL PRINCIPAL STAND, MAIN	1					
2	5VL–F7112–11	EJE DE PUNTAL PRINCIPAL SHAFT, MAIN STAND	1					
3	5VL–F7115–01	CONEXION DE PUNTAL PRINCIPAL LINK, MAIN STAND	1					
4	90506–32800	RESORTE DE TENSION SPRING, TENSION	1					
5	1SF–F7211–00	PEDAL DE FRENO PEDAL, BRAKE	1					
6	90508–40801	RESORTE DE TORSION SPRING, TORSION	1					
7	5VL–F7231–01	VARILLA DE FRENO ROD, BRAKE	1					
8	91402–20012	CHAVETA PIN, COTTER	1					
9	92902–06200	ARANDELA WASHER	2					
10	90501–10806	RESORTE DE COMPRESION SPRING, COMPRESSION	1					
11	90249–12808	PASADOR PIN	1					
12	90179–06826	TUERCA NUT	1					
13	1BK–F7411–20	APOYAPIE 1 FOOTREST 1	1					
14	5VL–H2109–00	UNION, TUBO JOINT, HOSE	1					
15	5VL–F7413–00	CUBIERTA DE APOYAPIE COVER, FOOTREST	2					
16	95812–08020	TORNILLO DE REBORDE BOLT, FLANGE	2					
17	5VL–F7311–00	PUNTAL LATERAL STAND, SIDE	1					
18	90506–29800	RESORTE DE TENSION SPRING, TENSION	1					
19	90109–10849	PERNO BOLT	1					
20	90185–10807	TUERCA AUTOBLOCANTE NUT, SELF-LOCKING	1					
21	5VL–F7452–00	SOPORTE, DE APOYAPIE 1 BRACKET, FOOTREST 1	1					
22	3D9–F7462–00	SOPORTE, DE APOYAPIE 2 BRACKET, FOOTREST 2	1					
23	95812–08020	TORNILLO DE REBORDE BOLT, FLANGE	2					
24	5VL–F7430–01	APOYAPIE POSTERIOR COMPLETO 1 REAR FOOTREST ASSY 1	1					
25	5VL–F7433–00	.CUBIERTA APOYAPIE TRASERO .COVER, REAR FOOTREST	1					
26	5VL–F7445–01	PLACE 1 PLATE 1	1					
27	5VL–F7440–01	APOYAPIE POSTERIOR COMPLETO 2 REAR FOOTREST ASSY 2	1					

SEACUBE
ONE-STOP PARTS SOLUTION

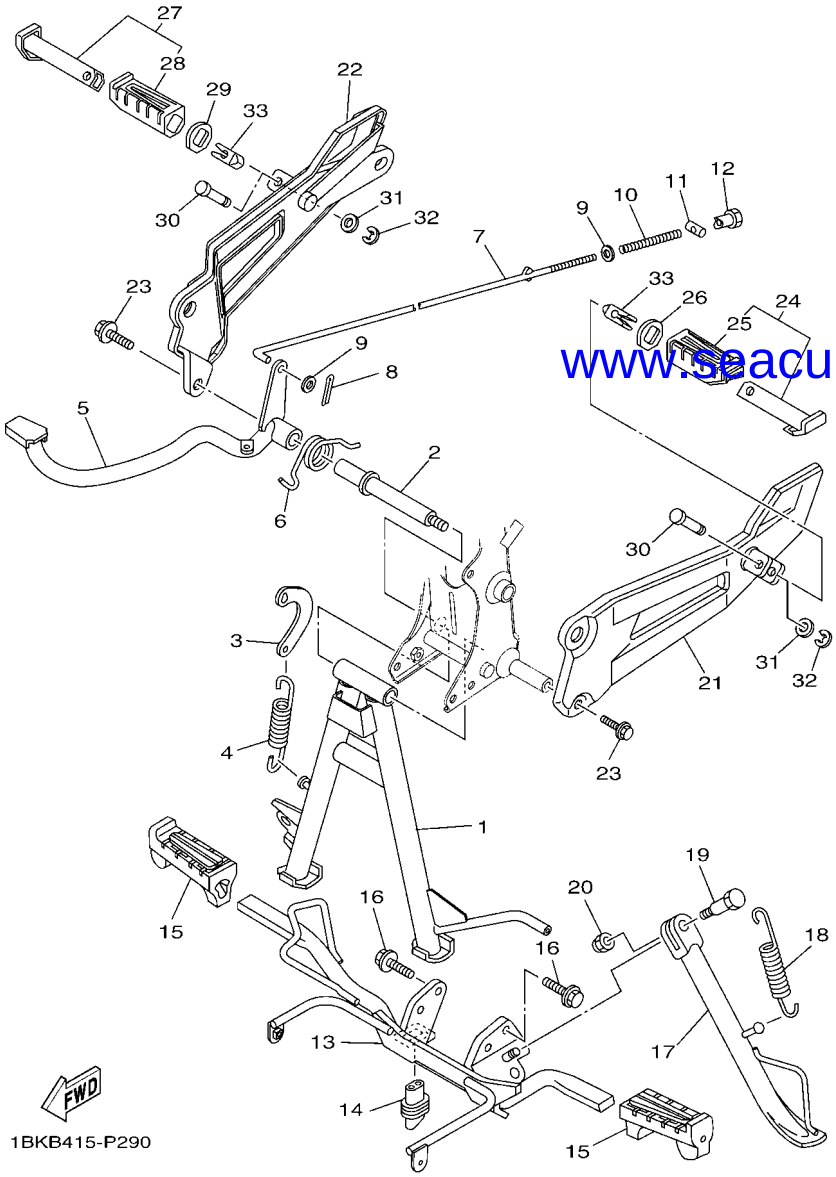

www.seacubemoto.com

FIG. 29 SOPORTE & APOYAPIE — STAND & FOOTREST

REF. Nº	CODIGO Nº PART NO.	DESCRIPCION DESCRIPTION	BH72					OBSERVACIONES REMARKS
28	5VL–F7444–00	.CUBIERTA APOYAPIE TRASERO .COVER, REAR FOOTREST	1					
29	5VL–F7445–01	PLACE 1 PLATE 1	1					
30	90249–06800	PASADOR PIN	2					
31	92902–06200	ARANDELA WASHER	2					
32	99002–05600	PRESILLA REDONDA CIRCLIP	2					
33	5VL–F7414–00	AMORTIGUADOR DE APOYAPIE DAMPER, FOOTREST	2					

SEACUBE
ONE-STOP PARTS SOLUTION

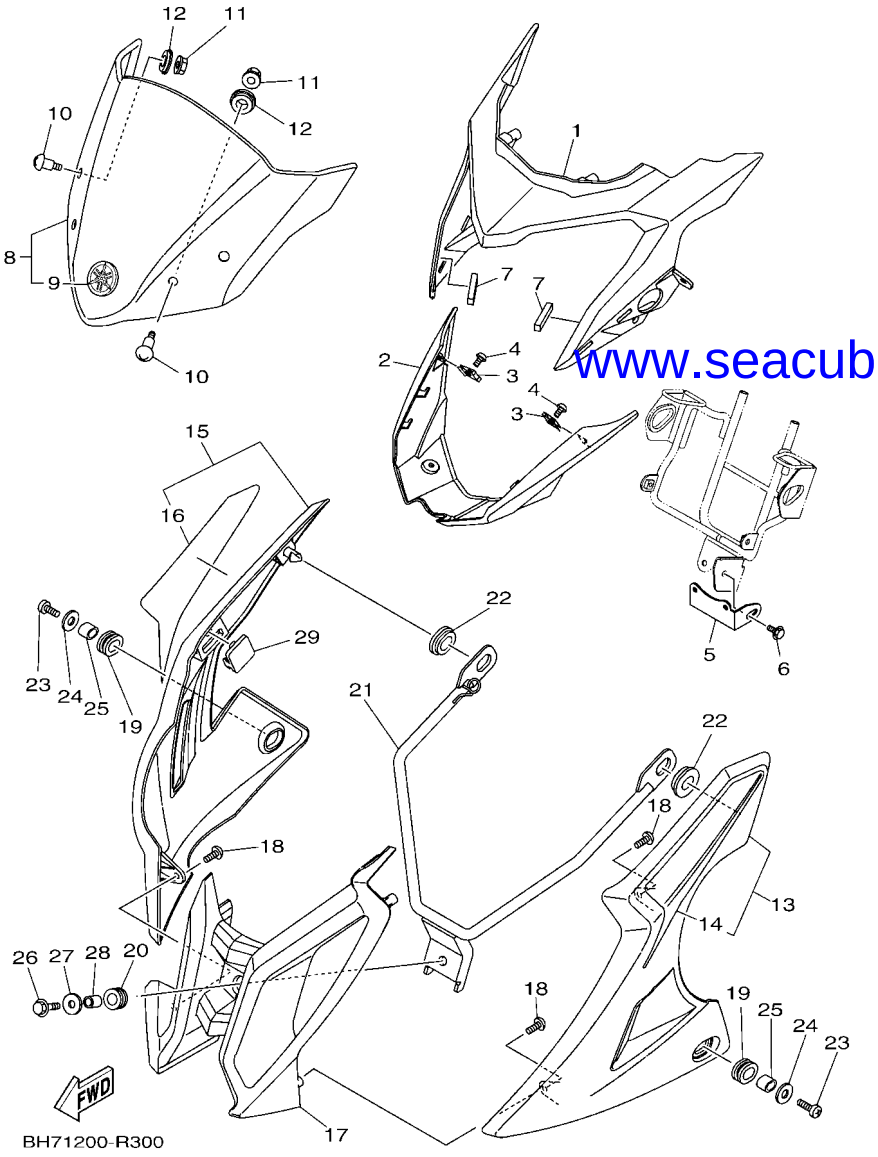

www.seacubemoto.com

FIG. 30 BOVEDA 1 — COWLING 1

REF. Nº	CODIGO Nº PART NO.	DESCRIPCION DESCRIPTION	BH72					OBSERVACIONES REMARKS
1	1BK–F3121–00	CUBIERTA SUPERIOR 1 COVER, UPPER 1	1					
2	1BK–F3122–00–P4	CUBIERTA EXTERIOR 1 COVER, OUTER 1	1					UR DBNM8 PARA SMX UR DBNM8 FOR SMX
	1BK–F3122–00–P5	CUBIERTA EXTERIOR 1 COVER, OUTER 1	1					UR PARA RM7 UR FOR RM7
	1BK–F3122–00–P6	CUBIERTA EXTERIOR 1 COVER, OUTER 1	1					UR PARA BWC1 UR FOR BWC1
	1BK–F3122–00–P3	CUBIERTA EXTERIOR 1 COVER, OUTER 1	1					UR PARA DOMC UR FOR DOMC
3	90183–05807	TUERCA DE RESORTE NUT, SPRING	2					
4	97702–50012	TORNILLO ROSCA HEMBRA SCREW, TAPPING	2					
5	1BK–F8336–00	PLATO PLATE	1					
6	95802–06010	TORNILLO DE REBORDE BOLT, FLANGE	1					
7	90520–08810	EQUILIBRIO, CUBIERTA DAMPER, PLATE	2					
8	1BK–Y2838–00	CUBIERTA INFERIOR COVER, LOWER ASSY	1					
9	5VL–F8315–10	.EMBLEMA .EMBLEM	1					
10	90149–05800	TORNILLO DE REGLAJE SCREW	4					
11	95702–05500	TUERCA DE BRIDA NUT, FLANGE	4					
12	5VL–F8215–01	ARANDELA ESPECIAL WASHER, SPECIAL	4					
13	1BK–W8385–00–P0	CUBIERTAINFERIOR 1 COVER, UNDER 1 ASSY.	1					UR PARA SMX UR FOR SMX
	1BK–W8385–01–P0	CUBIERTAINFERIOR 1 COVER, UNDER 1 ASSY.	1					UR PARA RM7 UR FOR RM7
	1BK–W8385–00–P2	CUBIERTAINFERIOR 1 COVER, UNDER 1 ASSY.	1					UR PARA BWC1 UR FOR BWC1
	1BK–W8385–00–P1	CUBIERTAINFERIOR 1 COVER, UNDER 1 ASSY.	1					UR PARA DOMC UR FOR DOMC
14	1BK–F8391–60	.CALCOMANIA 1 .GRAPHIC 1	1					UR PARA SMX UR FOR SMX
	1BK–F8391–70	.CALCOMANIA 1 .GRAPHIC 1	1					UR PARA RM7 UR FOR RM7
	1BK–F8391–80	.CALCOMANIA 1 .GRAPHIC 1	1					UR PARA BWC1 UR FOR BWC1
	1BK–F8391–90	.CALCOMANIA 1 .GRAPHIC 1	1					UR PARA DOMC UR FOR DOMC
15	1BK–W8395–00–P0	CUBIERTAINFERIOR 2 COVER, UNDER 2 ASSY.	1					UR PARA SMX UR FOR SMX
	1BK–W8395–01–P0	CUBIERTAINFERIOR 2 COVER, UNDER 2 ASSY.	1					UR PARA RM7 UR FOR RM7
	1BK–W8395–00–P2	CUBIERTAINFERIOR 2 COVER, UNDER 2 ASSY.	1					UR PARA BWC1 UR FOR BWC1
	1BK–W8395–00–P1	CUBIERTAINFERIOR 2 COVER, UNDER 2 ASSY.	1					UR PARA DOMC UR FOR DOMC

SEACUBE
ONE-STOP PARTS SOLUTION

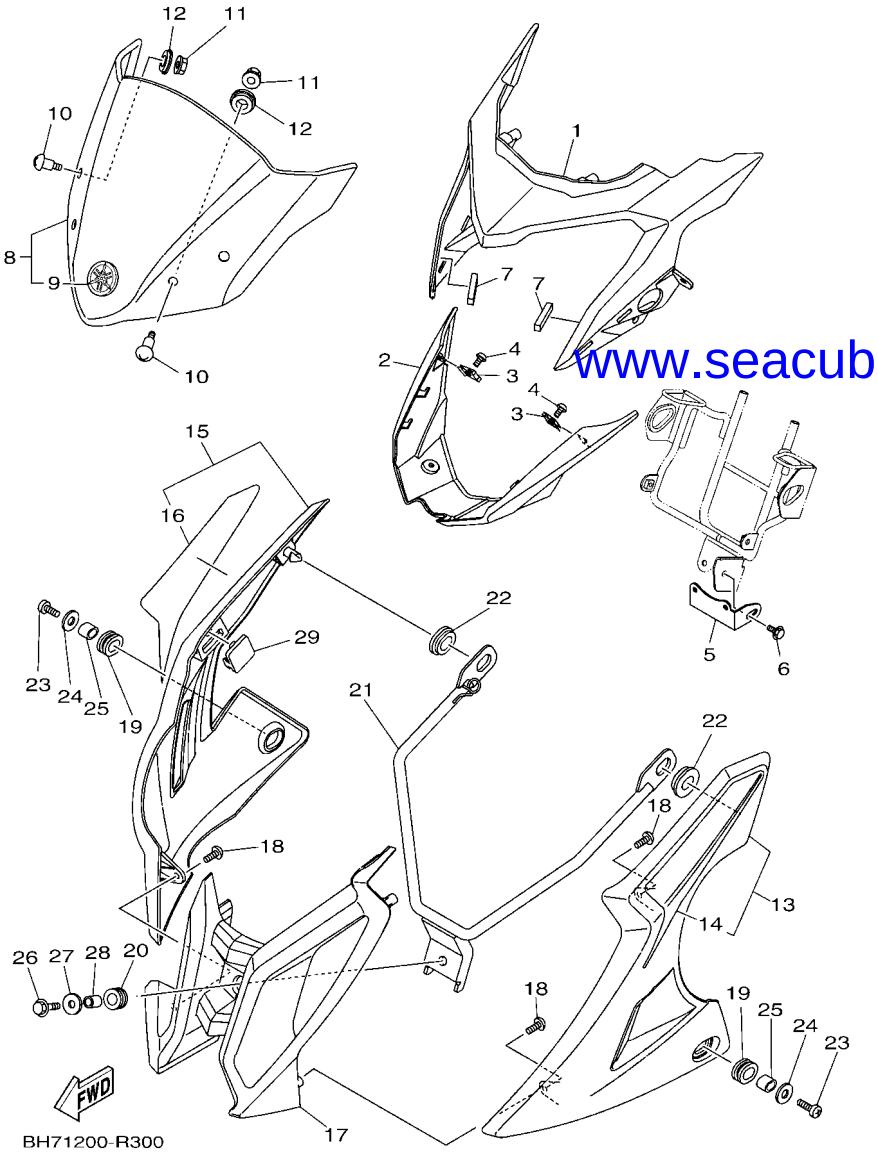

www.seacubemoto.com

FIG. 30 BOVEDA 1 — COWLING 1

REF. Nº	CODIGO Nº PART NO.	DESCRIPCION DESCRIPTION	BH72					OBSERVACIONES REMARKS
16	1BK–F8392–60	.CALCOMANIA 2 .GRAPHIC 2	1					UR PARA SMX UR FOR SMX
	1BK–F8392–70	.CALCOMANIA 2 .GRAPHIC 2	1					UR PARA RM7 UR FOR RM7
	1BK–F8392–80	.CALCOMANIA 2 .GRAPHIC 2	1					UR PARA BWC1 UR FOR BWC1
	1BK–F8392–90	.CALCOMANIA 2 .GRAPHIC 2	1					UR PARA DOMC UR FOR DOMC
17	1BK–F837D–00	CUBIERTA INFERIOR 3 COVER, UNDER 3	1					
18	97702–50016	TORNILLO ROSCA HEMBRA SCREW, TAPPING	3					
19	90480–01811	TAPON GROMMET	2					
20	90480–14003	TAPON GROMMET	1					
21	1BK–F8358–00	SOPORTE 3 STAY 3	1					
22	90480–01868	TAPON GROMMET	2					
23	98902–06020	TORNILLO DE LIGAR SCREW, BIND	2					
24	90201–06850	ARANDELA PLANA WASHER, PLATE	2					
25	1BK–F1749–00	COLLAR COLLAR	2					
26	95812–06025	TORNILLO DE REBORDE BOLT, FLANGE	1					
27	90201–06850	ARANDELA PLANA WASHER, PLATE	1					
28	90387–06113	ESPACIADOR COLLAR	1					
29	1BK–F8187–00	TAPON GROMMET	1					

SEACUBE
ONE-STOP PARTS SOLUTION

FIG. 31 GENERADOR — GENERATOR

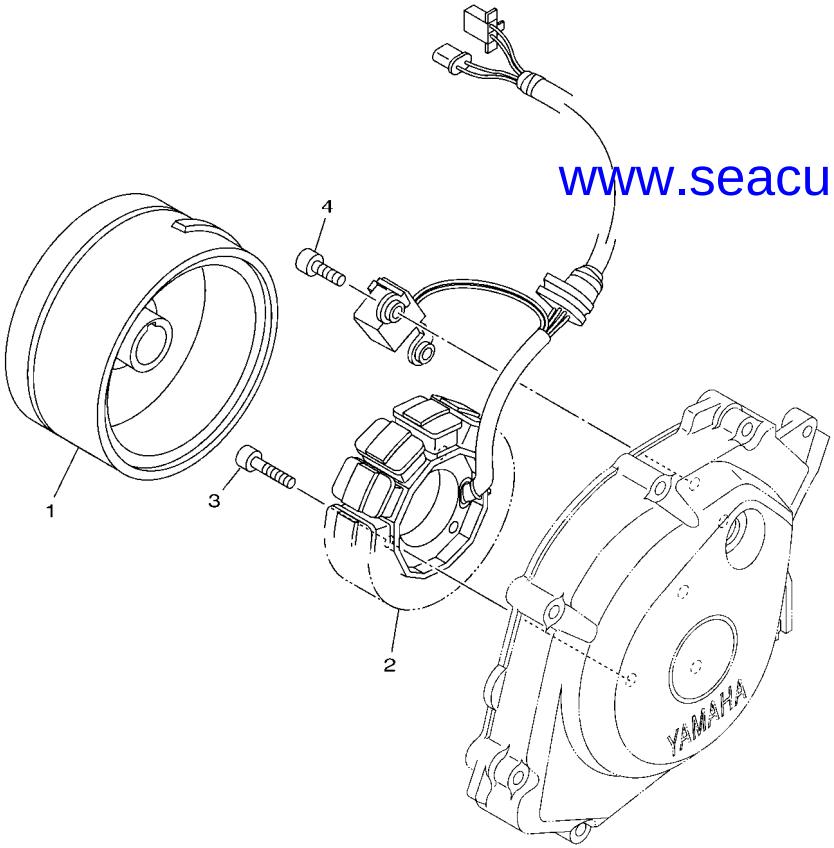

13RF415-L391

www.seacubemoto.com

REF. Nº	CODIGO Nº PART NO.	DESCRIPCION DESCRIPTION	BH72					OBSERVACIONES REMARKS
1	1SF–H1450–20	ROTOR COMPLETO ROTOR ASSY	1					
2	1SF–H1410–20	ESTATOR COMPLETO STATOR ASSY	1					
3	91312–06025	TORNILLO ALLEN BOLT, HEXAGON SOCKET HEAD	3					
4	91312–06014	TORNILLO BOLT	2					

SEACUBE
ONE-STOP PARTS SOLUTION

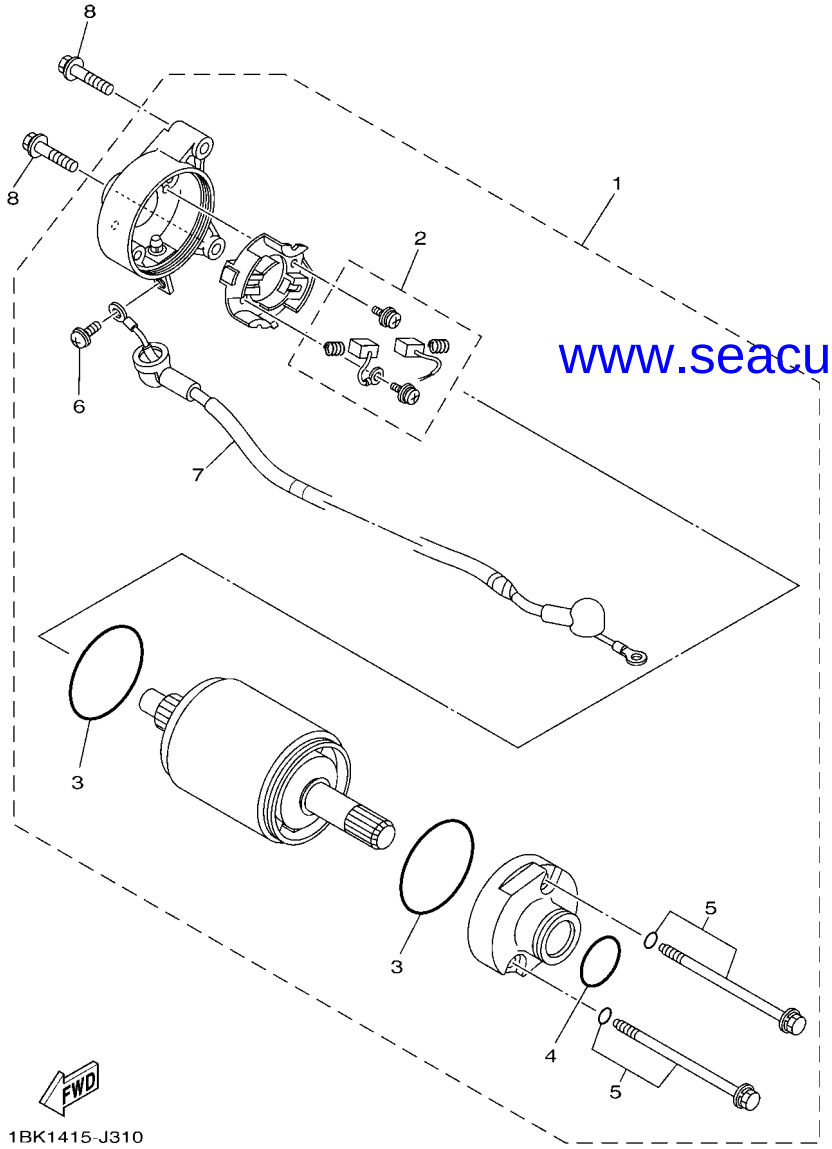

FIG. 32 MOTOR DE ARRANQUE — STARTING MOTOR

REF. Nº	CODIGO Nº PART NO.	DESCRIPCION DESCRIPTION	BH72					OBSERVACIONES REMARKS
1	1BK–H1800–10	MOTOR DE ARRANQUE COMPLETO STARTING MOTOR ASSY	1					
2	2D0–H1801–00	.JUEGO DE ESCOBILLA .BRUSH SET	1					
3	93210–54807	.ANILLO O .O-RING	2					
4	1BK–H1168–00	.ANILLO O .O-RING	1					
5	2D0–H1828–00	.TORNILLO DE EMPUJE 2 .SCREW 2	2					
6	98902–05008	.TORNILLO DE LIGAR .SCREW, BIND	1					
7	1BK–H183G–00	.CABLE DEL MOTOR COMPL. .CORD COMP.	1					
8	95022–06025	PERNO, DE BRIDA BOLT, FLANGE	2					

www.seacubemoto.com

SEACUBE
ONE-STOP PARTS SOLUTION

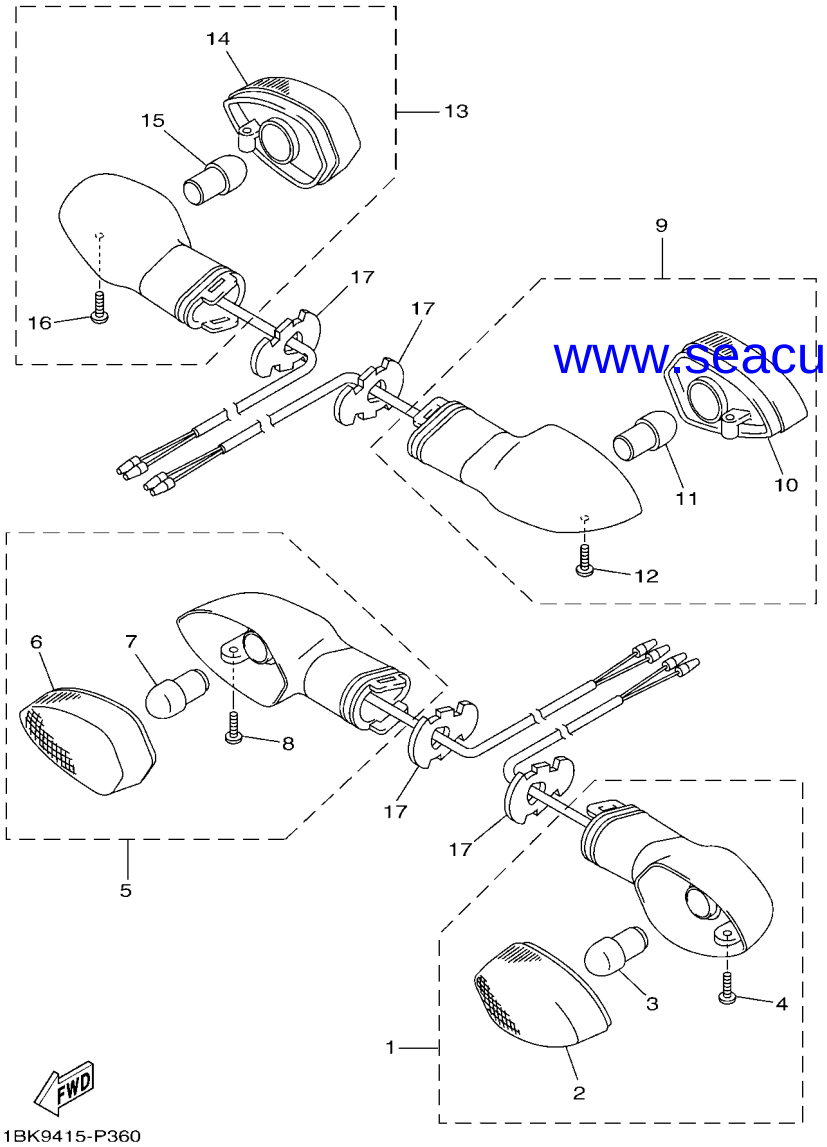

FIG. 33 LUZ DE DESTELLADOR — FLASHER LIGHT

REF. Nº	CODIGO Nº PART NO.	DESCRIPCION DESCRIPTION	BH72					OBSERVACIONES REMARKS
1	1BK–H3310–31	DESTELLADOR DE LUZ DELANT. FRONT FLASHER LIGHT ASSY 1	1					
2	1BK–H333A–30	.LENTES COMPLETO 1 .LENS COMP 1	1					
3	1BK–H3311–30	.BOMBILLA (12V-10W) .BULB, FLASHER (12V-10W)	1					
4	3D9–H334X–00	.TORNILLO ACCESORIO .SCREW, FITTING	1					
5	1BK–H3320–31	DESTELLADOR DE LUZ DELANT. FRONT FLASHER LIGHT ASSY 2	1					
6	1BK–H334A–30	.LENTES COMPLETO 2 .LENS COMP 2	1					
7	1BK–H3311–30	.BOMBILLA (12V-10W) .BULB, FLASHER (12V-10W)	1					
8	3D9–H334X–00	.TORNILLO ACCESORIO .SCREW, FITTING	1					
9	1BK–H3330–31	DESTELLADOR DE LUZ TRAS.COMPL. REAR FLASHER LIGHT ASSY 1	1					
10	1BK–H333A–30	.LENTES COMPLETO 1 .LENS COMP 1	1					
11	1BK–H3311–30	.BOMBILLA (12V-10W) .BULB, FLASHER (12V-10W)	1					
12	3D9–H334X–00	.TORNILLO ACCESORIO .SCREW, FITTING	1					
13	1BK–H3340–31	DESTELLADOR DE LUZ TRAS.COMPL. REAR FLASHER LIGHT ASSY 2	1					
14	1BK–H334A–30	.LENTES COMPLETO 2 .LENS COMP 2	1					
15	1BK–H3311–30	.BOMBILLA (12V-10W) .BULB, FLASHER (12V-10W)	1					
16	3D9–H334X–00	.TORNILLO ACCESORIO .SCREW, FITTING	1					
17	3D9–H3318–20	SOPORTE DE DESTELLADOR 1 STAY, FLASHER 1	4					

www.seacubemoto.com

SEACUBE
ONE-STOP PARTS SOLUTION

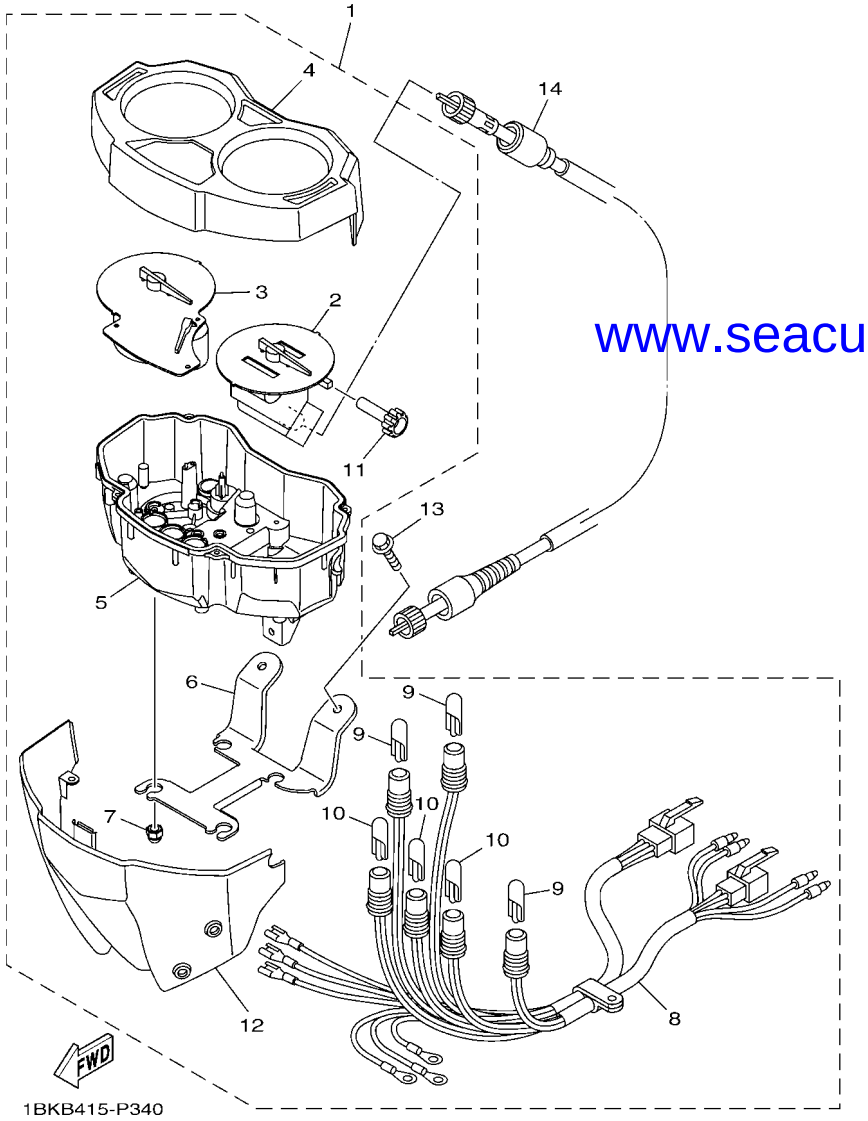

www.seacubemoto.com

FIG. 34 MEDIDOR — METER

REF. Nº	CODIGO Nº PART NO.	DESCRIPCION DESCRIPTION	BH72					OBSERVACIONES REMARKS
1	1BK–H3500–70	METRO COMPLETO METER ASSY	1					
2	1BK–HA251–60	.UNIDAD DE PASEO 1 .DRIVE UNIT 1	1					
3	1BK–H6550–60	.TRACCION COMPLETO .DRIVE ASSY	1					
4	1BK–H353G–60	.CAJA .CASE, UPPER	1					
5	1BK–H358L–60	.UNIDAD DE LA CAJA .CASE UNIT	1					
6	1BK–H350E–60	.SOPORTE .BRACKET	1					
7	1BK–24681–60	.TUERCA DE TAPA .NUT, CAP	2					
8	1BK–H3509–60	.ENCASTRE DE CABLE COMPLETO .SOCKET CORD ASSY	1					
9	4GU–H3517–10	.AMPOLLETA (14V-3W) .BULB (14V-3W)	3					
10	4GU–H3517–20	.AMPOLLETA (12V-1.7W T6.5) .BULB (12V-1.7W T6.5)	3					
11	1BK–H357H–60	.PERILLA .KNOB	1					
12	1BK–H3559–70	.CUBIERTA DE MEDIDOR .COVER, METER	1					
13	95022–06016	PERNO, DE BRIDA BOLT, FLANGE	2					
14	5VL–H3550–32	CABLE DE VELOCIMETRO COMPLETO SPEEDOMETER CABLE ASSY	1					

SEACUBE
ONE-STOP PARTS SOLUTION

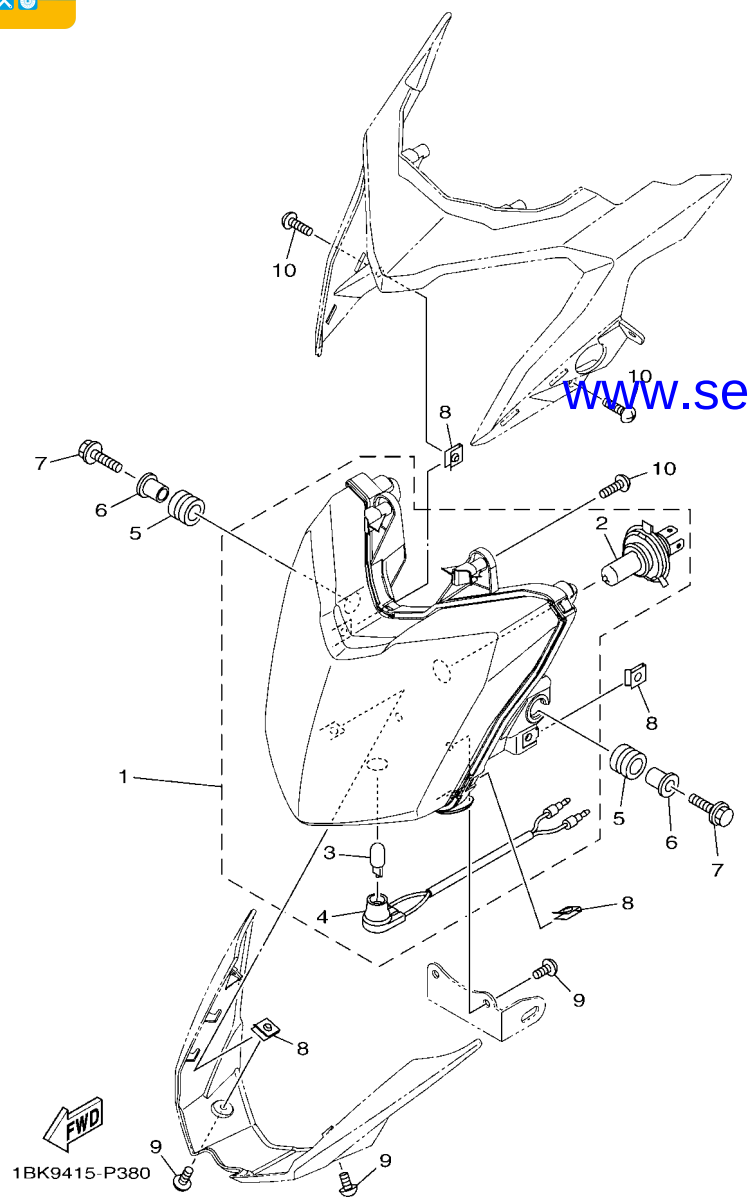

FIG. 35 FARO DELANTERO — HEADLIGHT

REF. Nº	CODIGO Nº PART NO.	DESCRIPCION DESCRIPTION	BH72					OBSERVACIONES REMARKS
1	1BK–H4310–20	UNIDAD DE FARO DELANTERO COMPL HEADLIGHT UNIT ASSY	1					
2	1SB–H4314–00	.BOMBILLA (12V-35/35W) .BULB, HEADLIGHT (12V-35/35W)	1					
3	1BK–H4347–20	.BOMBILLA (12V-W5W) .BULB (12V-W5W)	1					
4	1BK–H4312–20	.CABLE COMPLETA .CORD ASSY	1					
5	90480–14102	TAPON GROMMET	2					
6	90387–06158	ESPACIADOR COLLAR	2					
7	95822–06025	TORNILLO DE REBORDE BOLT, FLANGE	2					
8	90183–05807	TUERCA DE RESORTE NUT, SPRING	4					
9	97702–50012	TORNILLO ROSCA HEMBRA SCREW, TAPPING	4					
10	97702–50016	TORNILLO ROSCA HEMBRA SCREW, TAPPING	4					

www.seacubemoto.com

SEACUBE
ONE-STOP PARTS SOLUTION

FIG. 36 LUZ DE COLA — TAILLIGHT

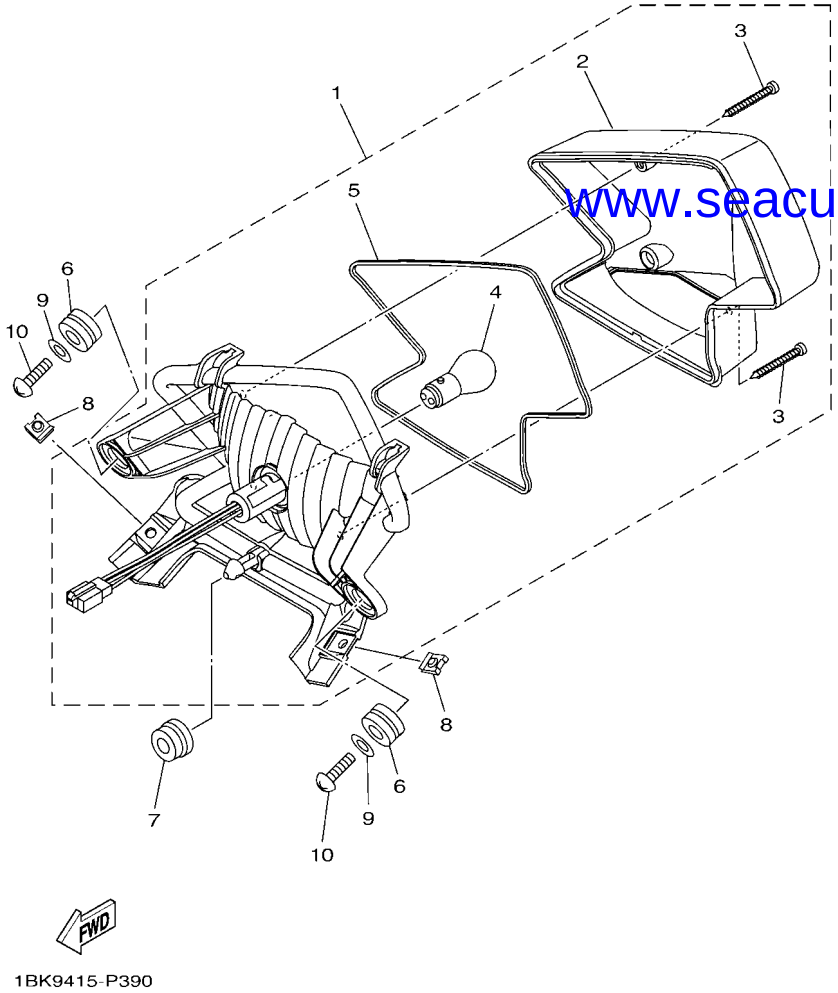

www.seacubemoto.com

REF. Nº	CODIGO Nº PART NO.	DESCRIPCION DESCRIPTION	BH72					OBSERVACIONES REMARKS
1	1BK–H4710–20	UNIDAD FARO TRASERO COMPL. TAILLIGHT UNIT ASSY	1					
2	1BK–H4721–20	.LENTE DE FARO TRASERO .LENS, TAILLIGHT	1					
3	3D9–H4724–10	.TORNILLO ACCESORIO DE LENTE .SCREW, LENS FITTING	4					
4	3D9–H4714–10	.BOMBILLA (12V-21/5W) .BULB (12V-21/5W)	1					
5	1BK–H4704–20	.EMPAQUETADURA DE LUZ DE COLA .GASKET, TAILLIGHT	1					
6	90480–14819	TAPON GROMMET	2					
7	90480–01868	TAPON GROMMET	1					
8	90183–05807	TUERCA DE RESORTE NUT, SPRING	2					
9	90201–05827	ARANDELA PLANA WASHER, PLATE	2					
10	97702–50016	TORNILLO ROSCA HEMBRA SCREW, TAPPING	2					

SEACUBE
ONE-STOP PARTS SOLUTION

FIG. 37 INTERRUPTOR DE MANILLAR&PALANC HANDLE SWITCH & LEVER

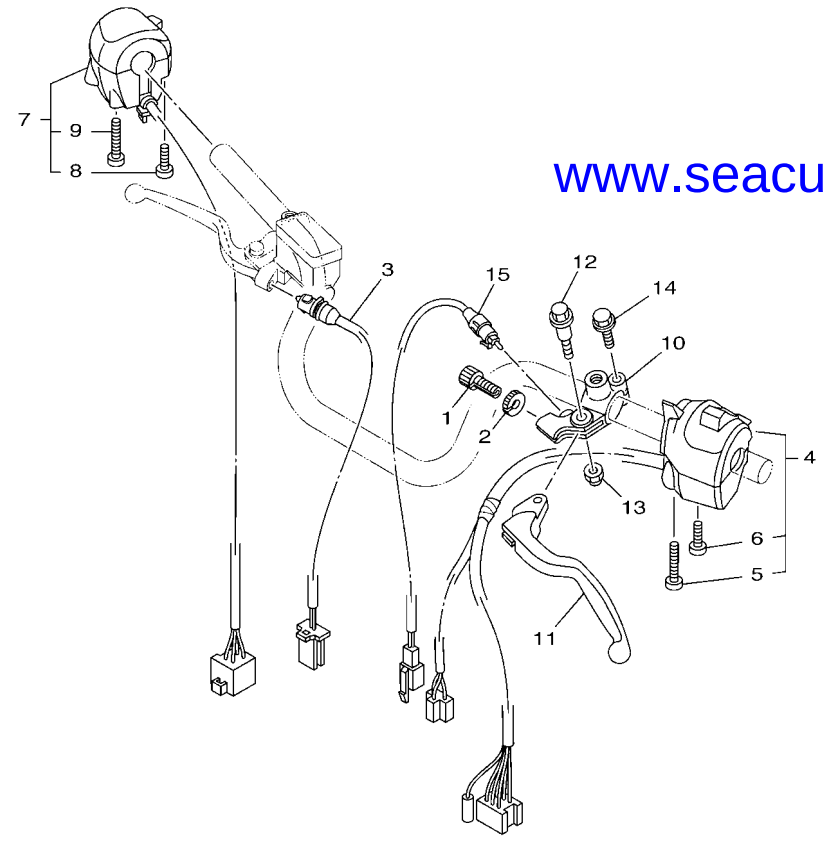

1BK9415-P410

www.seacubemoto.com

REF. Nº	CODIGO Nº PART NO.	DESCRIPCION DESCRIPTION	BH72					OBSERVACIONES REMARKS
1	90123–08813	PERNO BOLT	1					
2	90179–08862	TUERCA NUT	1					
3	5VL–H3980–01	INTERRUP. DE PARADA DELANTERO FRONT STOP SWITCH ASSY	1					
4	1BK–H3973–10	INTERRUPTOR DE MANIJA 3 SWITCH, HANDLE 3	1					
5	98507–05045	.TORNILLO DE CABEZA PLANA .SCREW, PAN HEAD	1					
6	98507–05025	.TORNILLO DE CABEZA PLANA .SCREW, PAN HEAD	1					
7	4P2–H3976–00	INTERRUPTOR DE MANIJA 1 SWITCH, HANDLE 1	1					
8	98507–05030	.TORNILLO DE CABEZA PLANA .SCREW, PAN HEAD	1					
9	98507–05050	.TORNILLO DE CABEZA PLANA .SCREW, PAN HEAD	1					
10	4FP–H2911–00	SOPORTE DE LEVA 1 HOLDER, LEVER 1	1					
11	5VL–H3912–00	PALANCA 1 LEVER 1	1					
12	90109–06850	PERNO BOLT	1					
13	95602–06100	TUERCA S/L NUT, S/L	1					
14	97522–06525	TORNILLO HEXAGONAL CON RONDONA BOLT, WITH WASHER	1					
15	2SB–H2917–00	INTERRUPTOR SWITCH	1					

SEACUBE
ONE-STOP PARTS SOLUTION

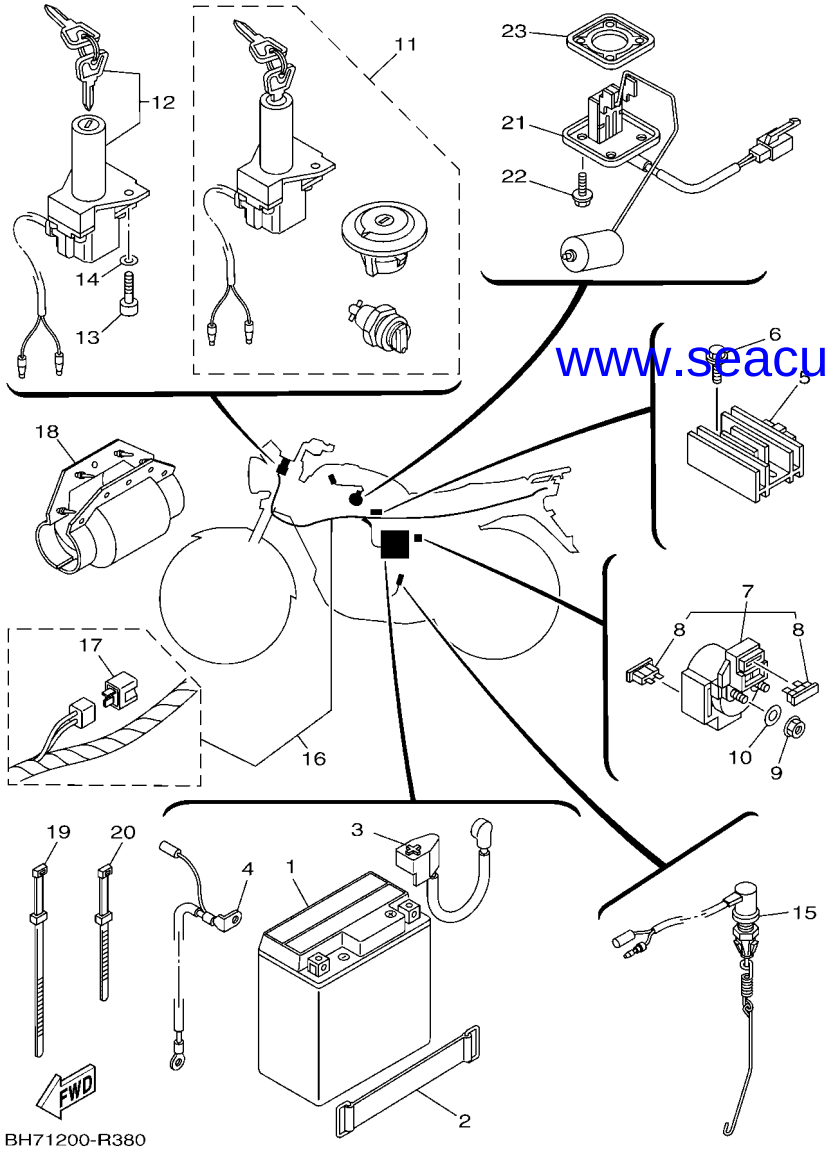

www.seacubemoto.com

FIG. 38 EQUIPO ELECTRICO 1 — ELECTRICAL 1

REF. Nº	CODIGO Nº PART NO.	DESCRIPCION DESCRIPTION	BH72					OBSERVACIONES REMARKS
1	13R–H2100–10	BATERIA COMPLETA (MTX7L-BS) BATTERY ASSY (MTX7L-BS)	1					
2	5VL–H2131–01	TIRANTE DE BATERIA BAND, BATTERY	1					
3	5VL–H2115–00	CABLE CONDUCTOR POSITIVO WIRE, PLUS LEAD	1					
4	5VL–H2116–00	CABLE CONDUCTOR NEGATIVO WIRE, MINUS LEAD	1					
5	2D0–H1960–10	RECTIFICADOR Y REGULADOR RECTIFIER & REGULATOR ASSY	1					
6	95802–06020	TORNILLO DE REBORDE BOLT, FLANGE	2					
7	5VL–H1940–01	CONJUNTO ARRANCADOR RELEVO STARTER RELAY ASSY	1					
8	4FP–H2151–00	.FUSIBLE (15A) .FUSE (15A)	2					
9	95302–06600	TUERCA NUT, HEXAGON	2					
10	90201–068C2	ARANDELA PLANA WASHER, PLATE	2					
11	2MP–Y8250–01	CONJUNTO DE LLAVE IGNICION SWITCH ASSY	1					AP AP
12	2MP–H2501–00	LLAVE DE IGNICION COMPLT MAIN SWITCH STEERING LOCK	1					
13	91312–06020	TORNILLO BOLT	2					
14	90201–068C2	ARANDELA PLANA WASHER, PLATE	2					
15	3S9–H2530–01	INTERRUPTOR DE PARADA COMPLETO STOP SWITCH ASSY	1					
16	1BK–H2590–30	CONJUNTO DE CABLES WIRE HARNESS ASSY	1					
17	1BK–H1980–30	.CONJUNTO DIODO .DIODE ASSY	1					
18	3D9–H2599–00	CUBIERTA DE CONECTOR COVER, CONNECTER	1					
19	5VL–H3936–00	BANDA DE CABLE DE INTERRUPTOR BAND, SWITCH CORD	3					
20	4TU–H3936–00	BANDA DE CABLE DE INTERRUPTOR BAND, SWITCH CORD	2					
21	1BK–H5752–10	UNIDAD TRANSM. MED. COMBUST. SENDER UNIT ASSY, FUEL METER	1					
22	90105–05832	TORNILLO BOLT, FLANGE	4					
23	4FP–H5753–01	EMPAQUE DE UNIDAD TRANSMISORA GASKET, SENDER UNIT	1					

SEACUBE
ONE-STOP PARTS SOLUTION

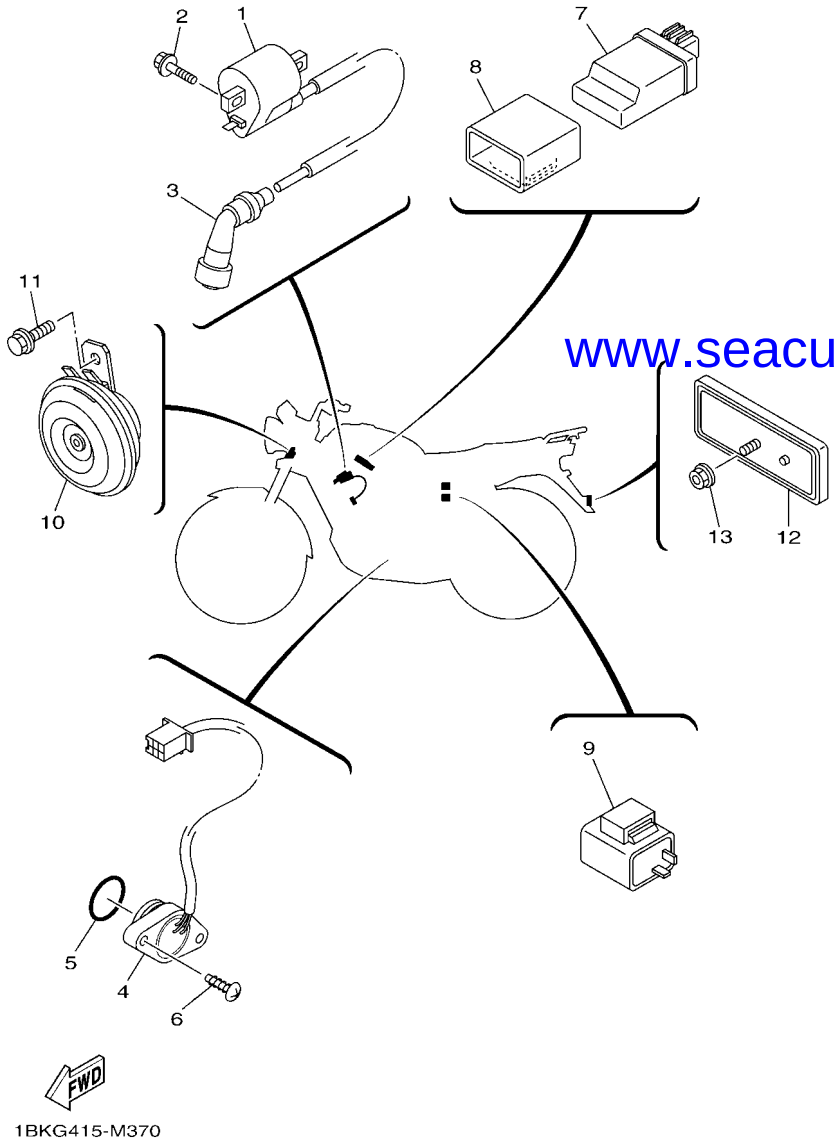

www.seacubemoto.com

FIG. 39 EQUIPO ELECTRICO 2 — ELECTRICAL 2

REF. Nº	CODIGO Nº PART NO.	DESCRIPCION DESCRIPTION	BH72					OBSERVACIONES REMARKS
1	1JP–H2310–00	BOBINA DE ENCENDIDO COMPLETA IGNITION COIL ASSY	1					
2	95022–06020	PERNO, DE BRIDA BOLT, FLANGE	2					
3	1JP–H2370–01	TAPON DE BUJIA COMPLT PLUG CAP ASSY	1					
4	13R–H2540–00	INTERRUPTOR NEUTRAL COMPL NEUTRAL SWITCH ASSY	1					
5	93210–23801	ANILLO O O-RING	1					
6	90154–05802	TORNILLO DE LIGAR SCREW, BINDING	2					
7	1JP–H5540–10	UNIDAD C.D.I. COMPLETA C.D.I. UNIT ASSY	1					
8	5VL–H5546–00	BANDA BAND	1					
9	18C–H3350–01	RELE DE DESTELLADOR COMPL. FLASHER RELAY ASSY	1					
10	18C–H3371–10	BOCINA HORN	1					
11	95822–06012	TORNILLO DE REBORDE BOLT, FLANGE	1					
12	4FP–H5130–21	REFLECTOR TRASERO COMPLETO REAR REFLECTOR ASSY	1					
13	95702–05500	TUERCA DE BRIDA NUT, FLANGE	1					

SEACUBE
ONE-STOP PARTS SOLUTION

INDICE NUMERICO
NUMERICAL INDEX

CODIGO Nº PART NO.	REF. Nº
2UJ–11133–10	1 – 2
22F–11134–10	1 – 3
5KA–12113–00	3 – 5
5EK–14349–00	7 – 31
5EK–14363–00	7 – 30
5RS–14364–00	7 – 29
5PA–21568–01	22 – 40
1BK–24681–60	34 – 7
5VL–E1111–01	1 – 1
5VL–E111F–00	4 – 5
5VL–E1166–00	9 – 4
4FP–E1167–00	9 – 3
5VL–E1181–00	1 – 15
5VL–E1185–00	1 – 7
5VL–E1186–10	1 – 10
5VL–E1310–10	1 – 18
5VL–E1351–10	1 – 19
5VL–E1422–00	2 – 7
5VL–E1454–00	2 – 8
5VL–E1631–00	2 – 10
5VL–E1633–00	2 – 11
2MP–E1651–00	2 – 4
5VL–E1681–00	2 – 5
5VL–E2111–00	3 – 1
5VL–E2116–01	3 – 4
5VL–E2117–01	3 – 7
5VL–E2118–00	3 – 6
1BK–E2119–00	3 – 3
5VL–E2121–00	3 – 2
5VL–E2151–00	3 – 8
5VL–E2156–00	3 – 10
5VL–E2171–00	4 – 1
5VL–E2176–00	4 – 7
2MP–E2210–00	4 – 15
5VL–E2213–10	4 – 16
5VL–E2231–00	4 – 11
5VL–E2241–00	4 – 12
5VL–E3300–01	5 – 1
5VL–E3324–00	5 – 11
5VL–E3325–00	5 – 2
5VL–E3329–00	5 – 6
4FP–E3411–00	5 – 10
5VL–E3451–00	5 – 12
4P2–E3586–00	6 – 1
5LB–E4153–00	7 – 22
4P2–E4196–00	7 – 25
4P2–E4197–00	7 – 26
5LB–E4214–00	7 – 5

CODIGO Nº PART NO.	REF. Nº
5FY–E4251–00	7 – 27
4P2–E4286–00	7 – 4
5LB–E4292–00	7 – 24
5LB–E4293–00	7 – 12
BH7–E4301–00	7 – 1
4JP–E4323–00	7 – 21
BH7–E4335–00	7 – 28
5RS–E4341–00	7 – 6
5RS–E4341–10	7 – 7
5LB–E4342–17	7 – 9
288–E4343–60	7 – 8
50M–E4355–00	7 – 14
BH7–E4371–00	7 – 15
5LB–E4384–00	7 – 3
5LB–E4385–00	7 – 16
5LB–E4386–00	7 – 17
5LB–E4390–00	7 – 18
5VL–E4411–00	6 – 6
5VL–E4412–00	6 – 7
5VL–E4417–00	6 – 18
5VL–E4424–01	6 – 15
5VL–E4437–00	6 – 10
5VL–E443E–00	6 – 14
5VL–E4450–02	6 – 8
5VL–E4452–00	6 – 11
4P2–E4453–00	6 – 9
5VL–E4462–00	6 – 12
5LB–E4592–00	7 – 23
5VL–E4613–00	8 – 9
5VL–E4628–00	8 – 4
5VL–E4710–00	8 – 1
5VL–E4758–00	8 – 3
2MP–E5118–00	9 – 6
5VL–E5191–00	10 – 10
5VL–E5362–00	10 – 19
BH7–E5411–00	10 – 1
18C–E5418–00	10 – 12
5VL–E5421–30	10 – 14
5VL–E5441–01	9 – 11
5VL–E5451–10	10 – 2
5VL–E5461–10	10 – 15
5VL–E5512–00	11 – 4
5VL–E5517–00	11 – 8
5VL–E5521–00	11 – 5
5VL–E5532–00	11 – 6
1BK–E5580–11	11 – 10
5VL–E5598–00	4 – 13
5VL–E6111–00	12 – 1

CODIGO Nº PART NO.	REF. Nº
5VL–E6150–00	12 – 6
5VL–E6154–00	12 – 7
5VL–E6154–00	12 – 17
5VL–E6300–10	12 – 5
5VL–E6321–10	12 – 9
5VL–E6324–00	12 – 10
5VL–E6333–10	12 – 12
5VL–E6337–00	12 – 13
5VL–E6351–00	12 – 11
5VL–E6357–01	12 – 21
5VL–E6371–10	12 – 8
5VL–E6381–02	12 – 22
5VL–E7121–00	13 – 3
5VL–E7141–00	13 – 4
5VL–E7141–00	13 – 5
5VL–E7151–00	13 – 2
5VL–E7211–00	13 – 19
5VL–E7221–00	13 – 14
5VL–E7231–00	13 – 15
5VL–E7241–00	13 – 18
5VL–E7251–00	13 – 13
5VL–E7402–00	13 – 12
5VL–E7411–00	13 – 1
3D9–E7456–01	13 – 27
5VL–E7471–00	13 – 10
5VL–E8101–12	15 – 7
5VL–E8110–01	15 – 9
1KL–E8113–00	15 – 10
5VL–E8140–00	15 – 1
4FP–E8177–00	15 – 3
1BK–E8185–00	14 – 5
5VL–E8337–00	15 – 2
2D0–E8511–00	14 – 7
2D0–E8512–00	14 – 8
2D0–E8513–00	14 – 9
5VL–E8531–00	14 – 10
5VL–E8535–00	14 – 11
1SF–E8541–00	14 – 1
1JD–E8542–00	14 – 2
BH7–F1110–00	16 – 1
1BK–F1316–20	16 – 2
BH7–F1317–00	16 – 7
5VL–F1318–00	16 – 8
18C–F1513–01	17 – 5
5VL–F1518–01	17 – 2
1BK–F1611–10	17 – 6
1BK–F1721–10	18 – 3
5VL–F1746–00	18 – 11

CODIGO Nº PART NO.	REF. Nº
3D9–F1747–00	18 – 12
1BK–F1749–00	30 – 25
5VL–F1778–00	18 – 5
3D9–F177G–01	18 – 10
5VL–F1780–01	18 – 6
1BK–F2110–00	19 – 1
5VL–F2141–01	19 – 3
5VL–F2151–10	19 – 6
5VL–F2210–31	19 – 9
5VL–F2311–00	19 – 7
5VL–F3102–E0	21 – 1
5VL–F3103–E0	21 – 18
5VL–F3106–D0	21 – 2
5VL–F3107–00	21 – 19
5HH–F3110–22	21 – 6
	21 – 23
5VL–F3111–20	21 – 15
	21 – 32
5HH–F3118–10	21 – 13
	21 – 30
1BK–F3121–00	30 – 1
1BK–F3122–00–P3	30 – 2
1BK–F3122–00–P4	30 – 2
1BK–F3122–00–P5	30 – 2
1BK–F3122–00–P6	30 – 2
5VL–F3141–40	21 – 11
	21 – 28
1ST–F3144–00	21 – 5
	21 – 22
1ST–F3145–00	21 – 3
	21 – 20
5AP–F3147–00	21 – 14
	21 – 31
5AP–F3153–00	21 – 4
	21 – 21
5VL–F3154–00	21 – 16
	21 – 33
5VL–F3165–01	20 – 12
5VL–F3170–01	21 – 7
	21 – 24
4GU–F3173–01	21 – 8
	21 – 25
1BK–F3174–50	20 – 15
4FP–F317J–00	20 – 17
5VL–F331X–01	21 – 35
5VL–F3346–10	21 – 37
5LK–F3356–01	21 – 10
	21 – 27

CODIGO Nº PART NO.	REF. Nº
5VL–F3389–01	20 – 18
4FP–F3411–00	20 – 2
4FP–F3411–10	21 – 36
1KL–F3412–00	20 – 1
4FP–F3412–00	20 – 3
4GU–F3416–00	20 – 5
5VL–F3418–01	20 – 7
5VL–F341E–00	20 – 4
5AP–F3427–00	21 – 12
	21 – 29
5VL–F3435–00–35	20 – 9
3S9–F3441–00	20 – 13
4TU–F3479–00	21 – 9
	21 – 26
12B–F411J–00	22 – 39
4FP–F4181–00	22 – 7
5VL–F4182–00	22 – 9
2MP–F4183–00	22 – 8
1BK–F4216–00	22 – 35
1BK–F4244–C0	22 – 3
1BK–F4244–D0	22 – 3
1BK–F4244–E0	22 – 3
1BK–F4244–F0	22 – 3
1BK–F4245–C0	22 – 4
1BK–F4245–D0	22 – 4
1BK–F4245–E0	22 – 4
1BK–F4245–F0	22 – 4
1BK–F4246–C0	22 – 5
1BK–F4246–D0	22 – 5
1BK–F4246–E0	22 – 5
1BK–F4246–F0	22 – 5
1BK–F4247–C0	22 – 6
1BK–F4247–D0	22 – 6
1BK–F4247–E0	22 – 6
1BK–F4247–F0	22 – 6
1BK–F424A–10	22 – 24
1BK–F424A–20	22 – 24
1BK–F424A–30	22 – 24
1BK–F424A–40	22 – 24
1BK–F424B–10	22 – 31
1BK–F424B–20	22 – 31
1BK–F424B–30	22 – 31
1BK–F424B–40	22 – 31
1BK–F4254–10	22 – 25
1BK–F4254–20	22 – 25
1BK–F4254–30	22 – 25
1BK–F4254–40	22 – 25
1BK–F4255–10	22 – 32

CODIGO Nº PART NO.	REF. Nº
1BK–F4255–20	22 – 32
1BK–F4255–30	22 – 32
1BK–F4255–40	22 – 32
1BK–F4256–10	22 – 26
1BK–F4256–20	22 – 26
1BK–F4256–30	22 – 26
1BK–F4256–40	22 – 26
1BK–F4257–10	22 – 33
1BK–F4257–20	22 – 33
1BK–F4257–30	22 – 33
1BK–F4257–40	22 – 33
1BK–F4258–10	22 – 27
1BK–F4258–20	22 – 27
1BK–F4258–30	22 – 27
1BK–F4258–40	22 – 27
4P2–F4311–00	22 – 19
5VL–F4500–01	22 – 13
13R–F4510–00	22 – 12
5VL–F4524–01	22 – 14
5VL–F4610–12	22 – 18
1BK–F4730–10	23 – 1
4TU–F4741–00	8 – 2
	23 – 2
BH7–F477M–50	23 – 8
BH7–F477M–60	23 – 8
BH7–F477M–70	23 – 8
BH7–F477M–80	23 – 8
BH7–F477N–50	23 – 10
BH7–F477N–60	23 – 10
BH7–F477N–70	23 – 10
BH7–F477N–80	23 – 10
1BK–F4796–00	23 – 6
1BK–F4840–20	23 – 4
4GU–F5118–00	24 – 12
2MP–F511X–00	24 – 10
1BK–F5168–10–33	24 – 1
5VL–F5181–11	24 – 7
4GU–F5190–12	24 – 8
5VL–F5321–01–33	26 – 8
1BK–F5338–00–33	26 – 3
4GU–F533A–01	26 – 16
4GU–F5351–02	26 – 12
5VL–F5355–01	26 – 13
1KL–F5364–00	26 – 2
5VL–F5371–00	26 – 27
5VL–F5381–01	26 – 32
5VL–F5386–01	26 – 34
5VL–F5387–01	26 – 20

www.seacubemoto.com

SEACUBE
ONE-STOP PARTS SOLUTION

INDICE NUMERICO
NUMERICAL INDEX

CODIGO Nº PART NO.	REF. Nº
5VL–F5388–01	26 – 36
5VL–F53C0–10	26 – 39
5LK–F5412–01	26 – 23
5VL–F5445–01	26 – 21
2MP–F580U–00	25 – 3
3D9–F582U–10	25 – 1
2MP–F5852–00	28 – 5
4KL–F5854–00	28 – 3
4KL–F585B–00	28 – 4
3D9–F5865–01	28 – 11
5VL–F5867–00	28 – 10
3D9–F586F–01	28 – 9
3D9–F5872–11	28 – 12
5VL–F5875–01	28 – 17
5VL–F5876–00	28 – 18
5VL–F5886–00	28 – 16
1BK–F5887–00	28 – 15
3D9–F589F–01	28 – 8
2MP–F589H–00	28 – 6
4S5–F5917–00	25 – 12
4S5–F5919–00	25 – 11
4S5–F5921–01	25 – 8
4S5–F5924–01	25 – 13
4S5–F5925–00	25 – 14
4S5–F5937–00	25 – 9
4S5–F5939–00	25 – 10
1BK–F6111–00	27 – 1
5VL–F6240–00	27 – 2
5VL–F6241–00	27 – 3
13R–F6280–01	27 – 6
13R–F6290–01	27 – 7
4P2–F6311–10	27 – 8
BH7–F6331–00	27 – 10
5VL–F6335–11	27 – 4
5VL–F6372–01	27 – 5
1BK–F7111–00	29 – 1
5VL–F7112–11	29 – 2
5VL–F7115–01	29 – 3
1SF–F7211–00	29 – 5
5VL–F7231–01	29 – 7
5VL–F7311–00	29 – 17
1BK–F7411–20	29 – 13
5VL–F7413–00	29 – 15
5VL–F7414–00	29 – 33
5VL–F7430–01	29 – 24
5VL–F7433–00	29 – 25
5VL–F7440–01	29 – 27
5VL–F7444–00	29 – 28

CODIGO Nº PART NO.	REF. Nº
5VL–F7445–01	29 – 26
	29 – 29
5VL–F7452–00	29 – 21
3D9–F7462–00	29 – 22
5VL–F8100–10	16 – 16
5VL–F811G–01	16 – 17
1BK–F8187–00	30 – 29
5VL–F8215–01	30 – 12
5VL–F8315–10	30 – 9
1BK–F8336–00	30 – 5
1BK–F8358–00	30 – 21
1BK–F837D–00	30 – 17
1BK–F8391–60	30 – 14
1BK–F8391–70	30 – 14
1BK–F8391–80	30 – 14
1BK–F8391–90	30 – 14
1BK–F8392–60	30 – 16
1BK–F8392–70	30 – 16
1BK–F8392–80	30 – 16
1BK–F8392–90	30 – 16
1BK–H1168–00	32 – 4
1SF–H1410–20	31 – 2
1SF–H1450–20	31 – 1
1BK–H1800–10	32 – 1
2D0–H1801–00	32 – 2
2D0–H1828–00	32 – 5
1BK–H183G–00	32 – 7
5VL–H1940–01	38 – 7
2D0–H1960–10	38 – 5
1BK–H1980–30	38 – 17
13R–H2100–10	38 – 1
5VL–H2109–00	29 – 14
5VL–H2115–00	38 – 3
5VL–H2116–00	38 – 4
5VL–H2131–01	38 – 2
4FP–H2151–00	38 – 8
1JP–H2310–00	39 – 1
1JP–H2370–01	39 – 3
2MP–H2501–00	38 – 12
3S9–H2530–01	38 – 15
13R–H2540–00	39 – 4
1BK–H2590–30	38 – 16
3D9–H2599–00	38 – 18
4FP–H2911–00	37 – 10
2SB–H2917–00	37 – 15
1BK–H3310–31	33 – 1
1BK–H3311–30	33 – 3
	33 – 7

CODIGO Nº PART NO.	REF. Nº
1BK–H3311–30	33 – 11
	33 – 15
1BK–H3311–30	33 – 17
1BK–H3320–31	33 – 5
1BK–H3330–31	33 – 9
1BK–H333A–30	33 – 2
	33 – 10
1BK–H3340–31	33 – 13
1BK–H334A–30	33 – 6
	33 – 14
3D9–H334X–00	33 – 4
	33 – 8
	33 – 12
	33 – 16
18C–H3350–01	39 – 9
18C–H3371–10	39 – 10
1BK–H3500–70	34 – 1
1BK–H3509–60	34 – 8
1BK–H350E–60	34 – 6
4GU–H3517–10	34 – 9
4GU–H3517–20	34 – 10
1BK–H353G–60	34 – 4
5VL–H3550–32	34 – 14
1BK–H3559–70	34 – 12
1BK–H357H–60	34 – 11
1BK–H358L–60	34 – 5
5VL–H3912–00	37 – 11
5VL–H3922–22	28 – 7
4TU–H3936–00	38 – 20
5VL–H3936–00	38 – 19
1BK–H3973–10	37 – 4
4P2–H3976–00	37 – 7
5VL–H3980–01	37 – 3
1BK–H4310–20	35 – 1
1BK–H4312–20	35 – 4
1SB–H4314–00	35 – 2
1BK–H4347–20	35 – 3
1BK–H4704–20	36 – 5
1BK–H4710–20	36 – 1
3D9–H4714–10	36 – 4
1BK–H4721–20	36 – 2
3D9–H4724–10	36 – 3
5VL–H5110–40	21 – 17
	21 – 34
4FP–H5130–21	39 – 12
1JP–H5540–10	39 – 7
5VL–H5546–00	39 – 8
1BK–H5752–10	38 – 21

CODIGO Nº PART NO.	REF. Nº
4FP–H5753–01	38 – 23
1BK–H6550–60	34 – 3
1BK–HA251–60	34 – 2
2MP–W0041–00	28 – 2
2MP–W0045–00	25 – 6
2MP–W0047–00	25 – 5
4S5–W0048–01	25 – 7
2MP–W0057–00	25 – 4
2MP–W1140–02	2 – 1
5VL–W1141–01	2 – 6
5VL–W1161–00	2 – 13
1BK–W137W–00–P0	22 – 21
1BK–W137W–00–P1	22 – 21
1BK–W137W–02–P0	22 – 21
1BK–W137W–02–P1	22 – 21
1BK–W137X–01–P0	22 – 28
1BK–W137X–01–P1	22 – 28
1BK–W137X–03–P0	22 – 28
1BK–W137X–03–P1	22 – 28
4P2–W1415–00	7 – 10
4P2–W149A–00	7 – 11
4P2–W149J–00	7 – 3
4P2–W149K–00	7 – 2
1SF–W1510–00	9 – 1
BH7–W2411–00–P0	22 – 1
BH7–W2411–00–P3	22 – 1
BH7–W2411–00–P4	22 – 1
BH7–W2411–00–P5	22 – 1
3D9–W2533–00	26 – 9
1BK–W471K–11–P4	23 – 7
1BK–W471K–11–P5	23 – 7
1BK–W471K–11–P6	23 – 7
1BK–W471K–11–P7	23 – 7
1BK–W472K–11–P4	23 – 9
1BK–W472K–11–P5	23 – 9
1BK–W472K–11–P6	23 – 9
1BK–W472K–11–P7	23 – 9
2MP–W583T–00	28 – 1
1BK–W8385–00–P0	30 – 13
1BK–W8385–00–P1	30 – 13
1BK–W8385–00–P2	30 – 13
1BK–W8385–01–P0	30 – 13
1BK–W8395–00–P0	30 – 15
1BK–W8395–00–P1	30 – 15
1BK–W8395–00–P2	30 – 15
1BK–W8395–01–P0	30 – 15
5VL–Y1153–00	2 – 2
5VL–Y1215–00	3 – 9

CODIGO Nº PART NO.	REF. Nº
4P2–Y1441–02	6 – 5
5VL–Y1635–10	12 – 14
1BK–Y2151–10–P3	17 – 1
1BK–Y2151–10–P4	17 – 1
1BK–Y2151–10–P5	17 – 1
1BK–Y2151–10–P6	17 – 1
1BK–Y2171–10	18 – 1
5VL–Y2536–00	26 – 17
1BK–Y2838–00	30 – 8
2MP–Y8250–01	38 – 11
90101–06848	26 – 14
90101–08820	4 – 9
90105–05832	38 – 22
90105–08724	1 – 12
90105–08874	16 – 4
90105–088D8	16 – 12
90105–088E4	16 – 9
90105–088E5	16 – 10
90105–088E6	16 – 13
90105–10831	25 – 15
90109–06850	37 – 12
90109–08847	26 – 28
90109–08848	26 – 29
90109–08864	26 – 22
90109–10849	29 – 19
90111–05803	22 – 37
90111–08805	25 – 2
90119–06811	18 – 13
90119–06869	6 – 16
	17 – 8
	23 – 3
	23 – 11
90123–08813	37 – 1
90149–05800	30 – 10
90151–06818	14 – 4
90153–06803	1 – 5
90153–08804	26 – 38
90154–05802	39 – 6
90155–06800	5 – 7
90157–03800	22 – 15
90159–06820	22 – 16
90159–06830	19 – 8
90170–12060	12 – 19
90176–10810	19 – 11
90176–22802	20 – 11
90179–05523	22 – 38
90179–06826	29 – 12
90179–08639	26 – 24

CODIGO Nº PART NO.	REF. Nº
90179–08830	16 – 6
	16 – 11
	16 – 14
90179–08862	37 – 2
90179–10807	16 – 5
90179–12813	12 – 4
90179–12863	2 – 18
90179–25806	20 – 6
90183–05807	17 – 7
	23 – 13
	30 – 3
	35 – 8
	36 – 8
90185–10807	29 – 20
90201–05803	8 – 7
90201–05804	8 – 8
90201–05827	36 – 9
90201–06850	18 – 9
	30 – 24
	30 – 27
90201–068C2	38 – 10
	38 – 14
90201–07641	5 – 4
90201–08877	4 – 8
90201–088C3	1 – 13
90201–088P2	22 – 10
90201–108C7	19 – 10
90201–108J9	28 – 14
90201–122H1	2 – 17
	12 – 3
90201–12819	19 – 5
90201–15700	13 – 20
90201–20266	13 – 6
	13 – 16
90201–20272	13 – 22
90201–228F6	18 – 7
90201–258D7	11 – 9
90202–26142	20 – 8
90206–06090	8 – 6
90208–07052	5 – 5
90215–12211	12 – 18
90249–06800	29 – 30
90249–12808	29 – 11
90267–32845	16 – 15
90280–03017	2 – 16
90282–05001	12 – 2
90338–30816	11 – 3
90340–12097	5 – 8

www.seacubemoto.com

SEACUBE
ONE-STOP PARTS SOLUTION

INDICE NUMERICO
NUMERICAL INDEX

CODIGO Nº PART NO.	REF. Nº
90340–14805	10 – 6
90340–32069	10 – 8
90387–06113	30 – 28
90387–06158	35 – 6
90387–07818	17 – 3
90387–15803	11 – 1
90387–15809	26 – 1
90387–15831	24 – 11
90387–15832	26 – 35
90387–167L5	4 – 4
90388–14800	19 – 2
90401–10811	28 – 13
90430–05800	22 – 17
90430–06817	1 – 6
	4 – 18
90430–12227	5 – 9
90450–44804	6 – 4
90450–51802	6 – 17
90467–09854	22 – 20
90467–12828	9 – 5
90480–01811	30 – 19
90480–01868	30 – 22
	36 – 7
90480–12835	22 – 23
	22 – 30
90480–13837	18 – 4
90480–14003	30 – 20
90480–14102	35 – 5
90480–14819	36 – 6
90480–15878	22 – 22
	22 – 29
90480–24186	18 – 2
90501–06805	14 – 3
90501–10806	29 – 10
90506–12801	26 – 10
90506–15802	26 – 11
90506–29800	29 – 18
90506–32800	29 – 4
90508–16800	12 – 23
90508–32801	15 – 5
90508–40801	29 – 6
90520–08810	30 – 7
90560–15293	24 – 2
91312–05010	13 – 28
91312–06012	4 – 6
91312–06014	31 – 4
91312–06020	8 – 10
	38 – 13

CODIGO Nº PART NO.	REF. Nº
91312–06025	6 – 3
	31 – 3
91312–06090	1 – 17
91312–08016	11 – 11
91402–20012	26 – 31
	29 – 8
92902–06200	12 – 15
	29 – 9
	29 – 31
93101–10800	10 – 21
93101–12803	15 – 4
93102–12812	12 – 24
93102–20854	13 – 24
93102–20857	24 – 1
93104–22802	26 – 6
93105–47808	24 – 9
93106–26804	26 – 19
93210–11800	2 – 14
93210–11809	2 – 14
93210–14817	10 – 7
93210–19809	10 – 20
93210–23801	39 – 5
93210–30611	6 – 2
93210–328A4	10 – 9
93210–42807	26 – 7
93210–44812	1 – 11
93210–54807	32 – 3
93210–71801	1 – 8
93306–002YU	4 – 3
93306–003X6	4 – 2
93306–054X3	26 – 18
93306–201Y8	13 – 8
93306–202XN	2 – 15
93306–202Y4	24 – 4
	26 – 4
93306–204YD	13 – 23
93306–205XJ	2 – 9
93306–252X5	26 – 5
93306–252YM	13 – 25
93306–253YJ	13 – 9
93310–629Y3	2 – 3
93410–20809	13 – 7
	13 – 17
93430–05823	5 – 3
93440–10109	1 – 4
93450–16812	2 – 12
93503–16824	12 – 20
93604–10837	14 – 6

CODIGO Nº PART NO.	REF. Nº
93608–30839	15 – 8
93822–14813	13 – 26
93822–14813	26 – 25
94127–18865	24 – 5
94227–18825	24 – 6
	26 – 26
94568–C1088	4 – 10
94668–E2001	26 – 40
94700–00869	1 – 14
95022–06016	4 – 17
	28 – 19
	34 – 13
95022–06020	1 – 9
	1 – 14
	39 – 2
95022–06025	28 – 20
	32 – 8
95022–06030	9 – 7
95022–06035	10 – 4
	10 – 17
95022–06045	9 – 8
	10 – 18
95022–06050	10 – 5
95022–06055	9 – 9
95022–08035	20 – 14
95022–08040	20 – 10
95302–06600	12 – 16
	26 – 15
	38 – 9
95312–08600	26 – 37
95602–06100	37 – 13
95602–12200	19 – 4
95602–14200	24 – 13
	26 – 33
95702–05500	30 – 11
	39 – 13
95702–08500	26 – 30
95802–06010	22 – 36
	30 – 6
95802–06012	22 – 34
95802–06020	4 – 14
	38 – 6
95812–06025	30 – 26
95812–08016	23 – 5
95812–08020	8 – 11
	29 – 16
	29 – 23
95812–10080	16 – 3

CODIGO Nº PART NO.	REF. Nº
95822–06012	20 – 19
	39 – 11
95822–06016	20 – 16
95822–06025	35 – 7
97002–08016	22 – 11
97022–06020	15 – 11
97522–06525	37 – 14
97602–06220	6 – 13
97702–50012	23 – 12
	30 – 4
	35 – 9
97702–50016	30 – 18
	35 – 10
	36 – 10
97801–04010	7 – 13
98502–05014	27 – 9
98507–05025	37 – 6
98507–05030	37 – 8
98507–05045	37 – 5
98507–05050	37 – 9
98512–06010	10 – 11
98512–06012	11 – 7
	13 – 11
98901–04006	7 – 19
98902–05008	32 – 6
98902–06016	10 – 13
98902–06020	18 – 8
	30 – 23
98980–06012	8 – 5
99002–05600	29 – 32
99002–10600	15 – 6
99009–15400	11 – 2
	13 – 21
99009–20500	12 – 25
99226–00100	22 – 2
99227–00100	22 – 2
99530–10114	1 – 16
	9 – 2
	9 – 10
	10 – 3
	10 – 16

CODIGO Nº PART NO.	REF. Nº

CODIGO Nº PART NO.	REF. Nº

www.seacubemoto.com