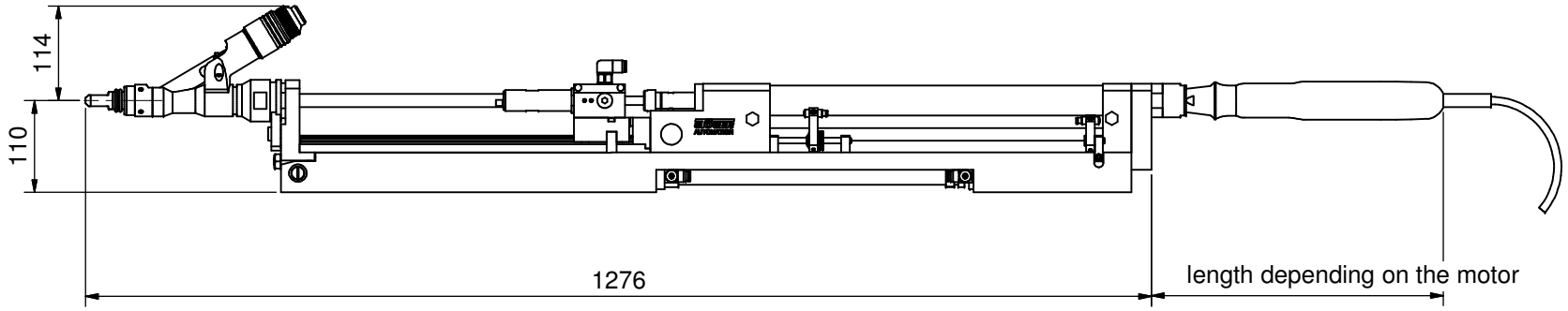

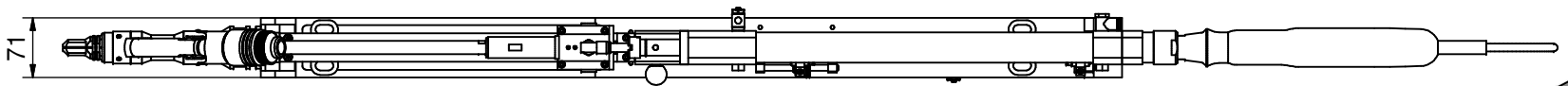

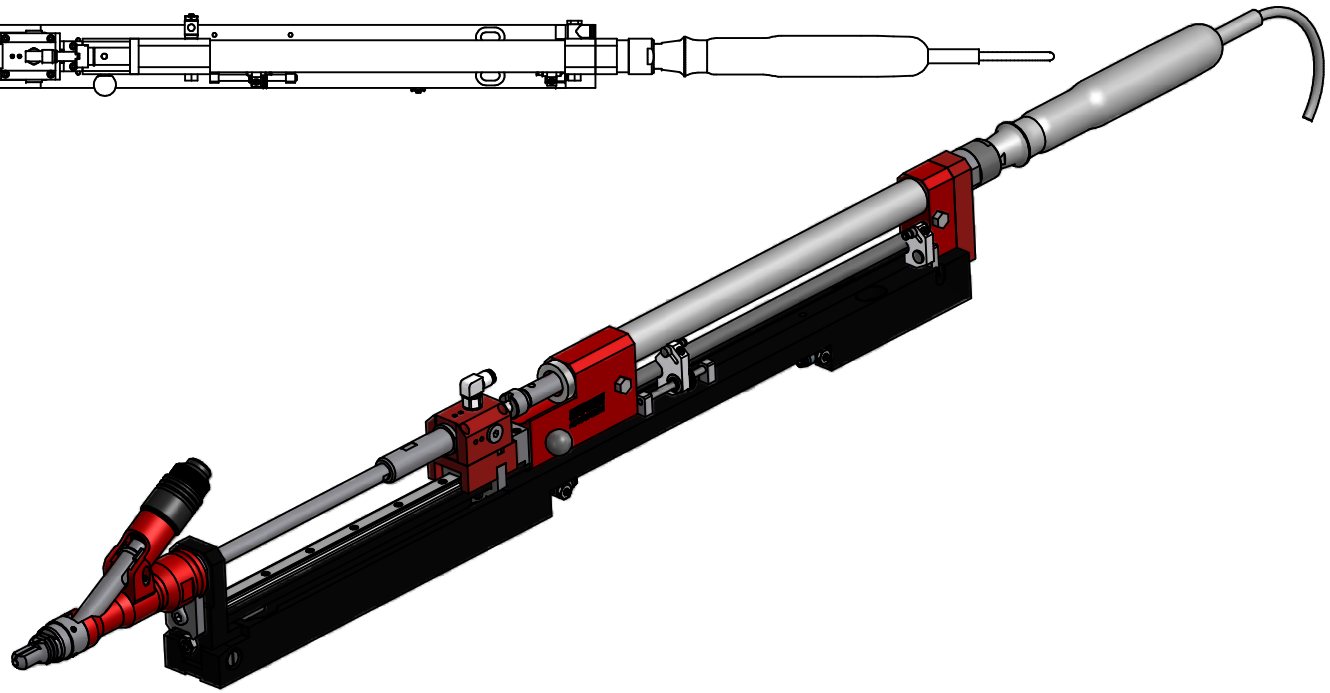

The measurements are exemplary only and may vary from case to case
Weight of the unit without motor 12 kg

www.stoeger.com