# DTSY238-7(D3710)

## three phase din rail type prepayment energy meter

HIKING
Smart meter for IoT

D3710

The prepayment meter is a new type IC card prepayment meter which has such function as power metering, load control and customer information management. It is an ideal product when reforming electric-use system, achieving electrical energy to commercialize, setting charge and adjusting load stage in the power network. It adopt LSI and SMT technology, the key component are long life international brand product.

## Basic Function

- LCD display 6+2
- Bi-directional total active energy measurement, reverse active energy measure in the total active energy Each user responds to a card, well protect from forgery
- Once the electric consumption is used up, it should be cut off automatically
- Auto cut-off for overload
- The IC card power selling control system has the function as power selling and using control
- Pulse LED indicates working of meter, Pulse output with optical coupling isolation
- 35mm din rail installation, bottom type wire connection

## Technical Data

| | | | |
|---|---|---|---|
| Rate voltage AC | 3x120/208V, , 3x230/400V, x240/415V (0.8~1.2Un) | | |
| Rate Current / Frequency | 5A/CT ,1.5(6)A ,5(60)A / 50Hz or 60Hz ± 10% | | |
| Connection mode | CT or Direct type | Accuracy class | 1% or 0.5% |
| Power consumption | <1W/10VA each phase | Start current | 0.004Ib |
| AC voltage withstand | 4000V/25mA for 60s | Over current withstand | 30Imax for 0.01s |
| IP grade | IP20 | Executive standard | IEC62053-21 IE62052-11 |
| Work temperature | -30℃ ~70℃ | Pulse output | Passive pulse, 80 ± 5 ms |

## Wire connection

(1) Three phase four wire direct connection

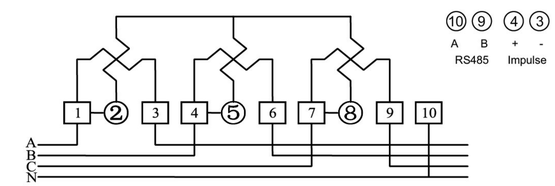


(2) Three phase four wire through current transformer connection

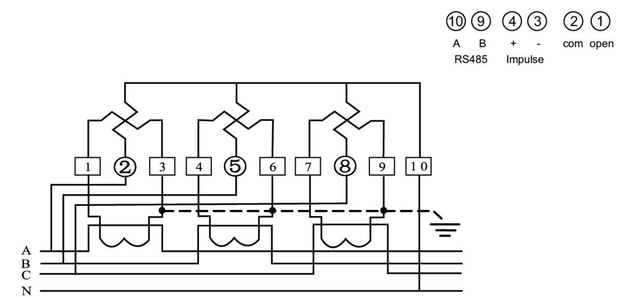

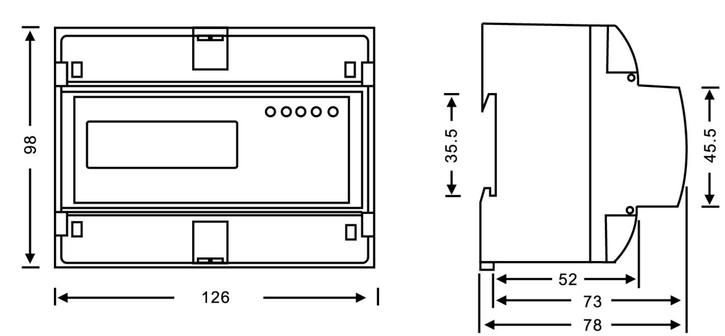
## Outline dimension