DTS238-7(D3709)

three phase din rail type WIFI remote control energy meter

HIKING
Smart meter for IoT

D3709

The meter is used in three phase four wire power grid. The meter is designed to measure AC active energy and variable parameter. It has remote read communication port RS485 and WIFI . It is a long life meter with the advantage of high stability, high over load capability, low power loss and small volume .

Basic Function

- LCD display with backlight , keypad for LCD display step by step
- Bi-directional total active energy measurement , reverse active/ energy measure in the total active/reactive energy
- The meter also display real voltage, current, active power, reactive power , power factor, frequency, import active energy, export active energy, resettable interval energy
- Overvoltage protection ,overload protection
- Timing and delay control by APP
- RS485 communication port , MODBUS-RTU protocol
- WIFI communication, can read and remote control by APP
- Pulse LED indicates working of meter, Pulse output with optical coupling isolation
- Loss phase LED indication, Reverse connection LED indication
- Energy data can store in memory chip more than 15 years after power off
- 35mm din rail installation , bottom type wire connection

Technical Data

Rate voltage AC	3x120/208V, , 3x230/400V, x240/415V (0.8~1.2Un)		
Rate Current / Frequency	5A/CT ,1.5(6)A , 5(60)A, 10(100)A / 50Hz or 60Hz ± 10%		
WIFI	802.11b/g/n		
Communication port	RS485 port, baud rate 1200~9600 bps, default is 9600bps, address 1~247, None parity, stop bits 1, data bits 8.		
Connection mode	CT or Direct type	Accuracy class	1% or 0.5%
Power consumption	<1W/10VA each phase	Start current	0.004Ib
AC voltage withstand	4000V/25mA for 60s	Over current withstand	30Imax for 0.01s
IP grade	IP20	Executive standard	IEC62053-21 IEC62052-11
Work temperature	-25℃ ~70℃	Pulse output	Passive pulse, 80 ± 5 ms

Wire connection

(1) Three phase four wire direct connection

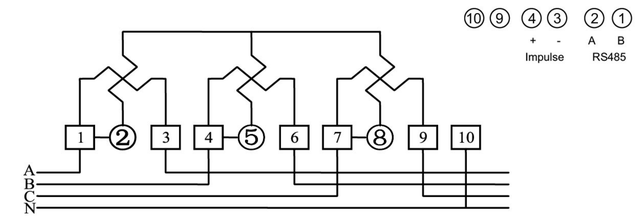

(2) Three phase four wire through current transformer connection

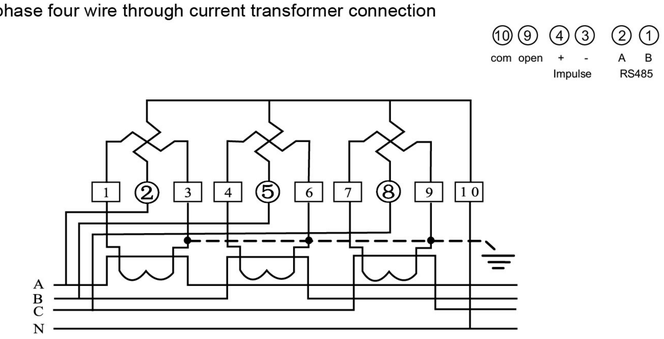
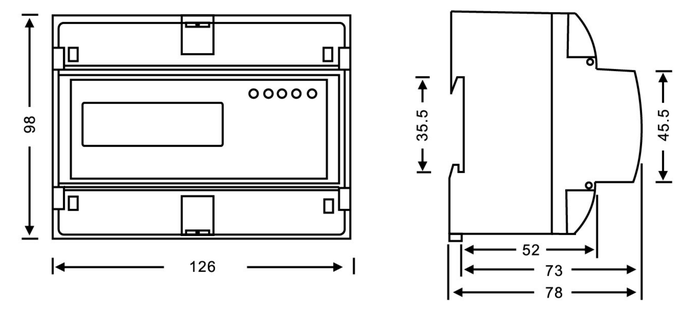
Outline dimension